APB102 配置板使用指南

上海安路信息科技股份有限公司

UG_914（v1.1）2022 年 06 月

Confidential

目 录

1 APB102 核心板介绍 1

2 APB102 核心板配套底板（配置板）介绍 3

3 APB102 核心板 DDR4 功能介绍 5

4 APB102 配置板功能介绍 7

4.1 系统电源配置 7

4.2 系统时钟配置 7

4.3 用户扩展 IO 9

4.4 USB 转 UART 10

4.5 按键 LED 11

4.6 SERDES 接口 13

4.7 配置接口 14

4.8 FLASH 型号匹配测试 17

5 APB102 配置板管脚分配 18

5.1 APB102 核心板 DDR4 IO 分配 18

5.2 APB102 核心板用户 IO 分配 23

5.3 APB102 核心板配置 IO 分配 32

5.4 APB102 核心板按键 LED 时钟 IO 分配 33

5.5 APB102 核心板散热风扇 IO 分配 34

5.6 APB102 配置板 FT2232 IO 分配 34

5.7 APB102 配置板 SI5345 IO 分配 35

5.8 APB102 配置板 SERDES IO 分配 36

5.9 APB102 配置板用户 IO 分配 37

5.10 APB102 配置板按键 LED 分配 39

5.11 APB102 配置散热风扇 IO 分配 39

5.12 APB102 对接 XC7Z035 IO 分配 39

5.13 XC7Z035 核心板管脚分配 41

6 版本信息 43

免责声明 43

1 APB102 核心板介绍

APB102 核心板可独立运行也可结合配套底板运行，核心板板载 PH1A400SFG900 芯片电源，JTAG 接口。

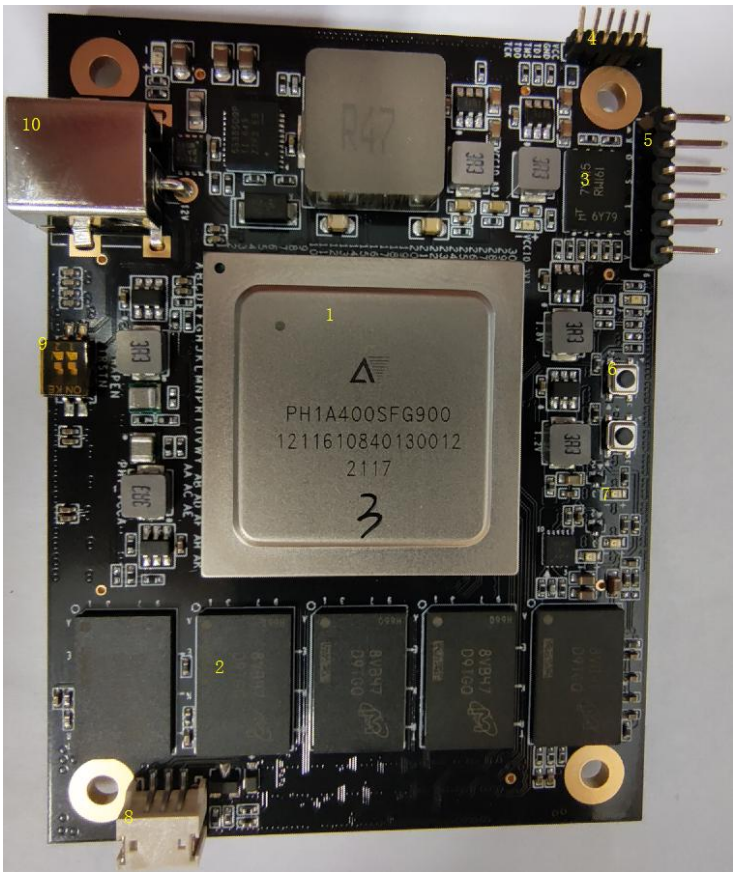

图 1-1 APB102 核心板实物图

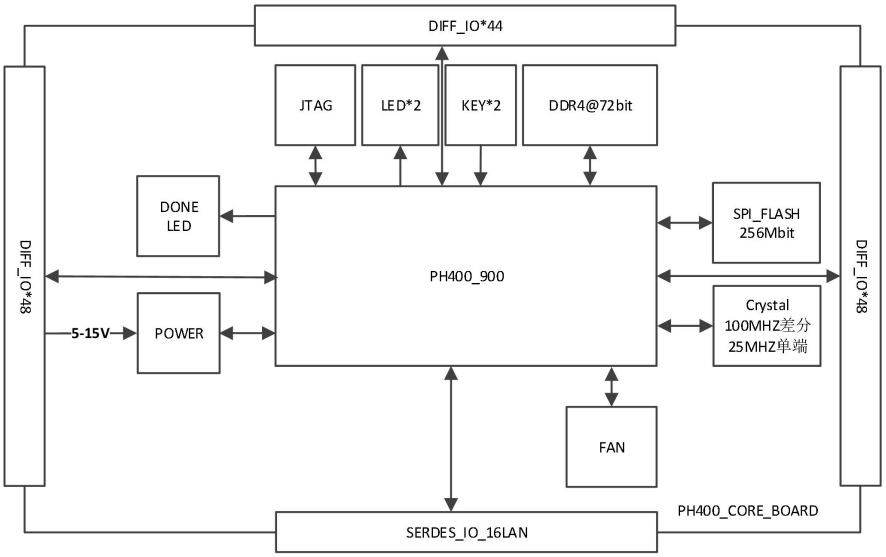

图 1-2 APB102 核心板功能框图

1. PH1A400SFG900 芯片。
2. 5 片 MT40A256M16GE-075E DDR4 颗粒 72bit。
3. MT25QL256ABA1EW9 256Mbit SPI FLASH。
4. 测试 IO*4，接口电压 VCCIO_ADJ（1.5-3.3V），方便扩展为串口或 JTAG 口使用。
5. JTAG 接口。
6. 按键 KEY*2。
7. 指示灯 LED*2。
8. 3 线风扇接口，带转速调节转速检测。
9. TRSTN,HSWAPEN 电平选择开关。
10. 5-15V DC2.1 电源接口。
11. 4*120 板对板连接器，实现核心板 IO 对外扩展。
12. HRIO BANK 电压可通过 FPGA IO 进行程控，电压程控范围 1.5 V，1.8 V，2.5 V，3.3V。

2 APB102 核心板配套底板（配置板）介绍

APB102 核心板配套底板具有加载测试功能，同时可进行 PCIe,SFP 光口验证，配置主核心板采用 XC7Z035，XC7Z035 可参照此文档使用。

功能框图如下图：

图 2-1 APB102 底板实物图

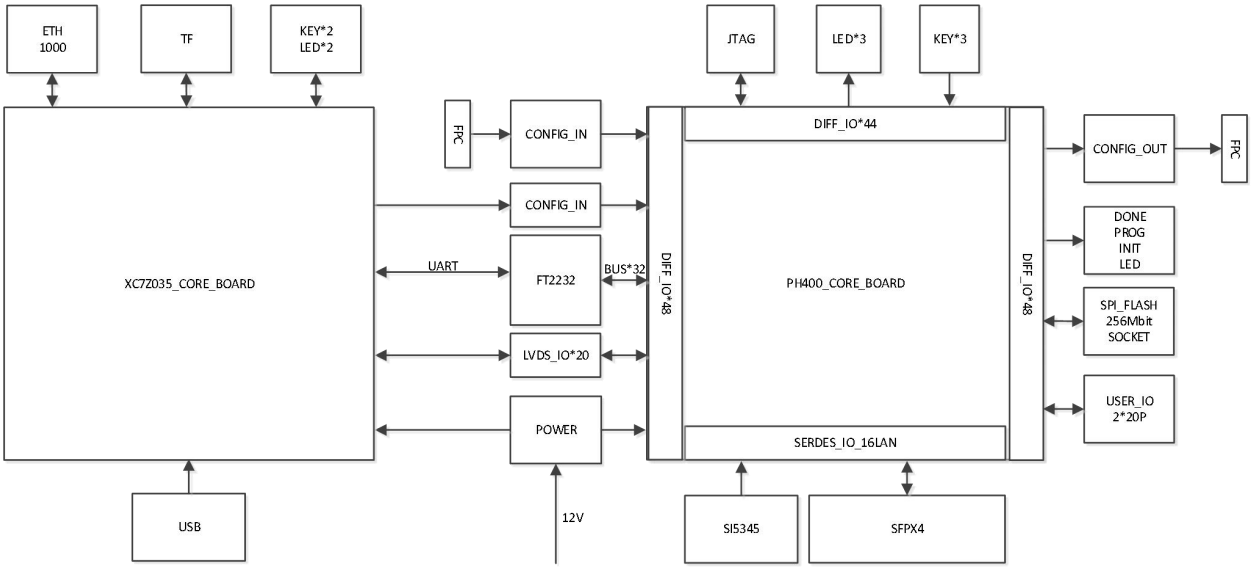

图 2-2 APB102 底板功能框图

1. XC7Z035 核心板。
2. PH1A400SFG900 核心板。
3. 8-15V DC2.1 电源输入座子。
4. 电源开关。
5. FT2232USB 接口，USB2.0 PHY+UART*2。
6. XC7Z035 核心板 USB 串口。
7. XC7Z035 核心板网口。
8. XC7Z035 核心板 JTAG 接口。
9. PH1A400SFG900 配置输入 FPC 接口。
10. XC7Z035 核心板 TF 卡接口。
11. PH1A400SFG900 WSOP8 FLASH 测试座。
12. PH1A400SFG900 WSOP16 FLASH 测试座。
13. PH1A400SFG900 FLASH 测试接口开关。
14. PH1A400SFG900 配置接口信号测试端口 DIP2*20P。
15. PH1A400SFG900 JTAG 接口。
16. PH1A400SFG900 JTAG 测试接口。
17. 带 5V 和 VCCIO 电源的用户接口，接口电平可通过 FPGA 程控。
18. 4 路光模块接口。
19. PH1A400SFG900 配置输出 FPC 接口。
20. XC7Z035 核心板 LED*2。
21. XC7Z035 核心板按键*2。
22. PH1A400SFG900 按键*3。
23. PH1A400SFG900 LED*3。
24. PH1A400SFG900 PCIEx4。
25. SI5345 PLL 时钟源。
26. FT2232 USB 转双串口+USB2.0PHY 芯片。

3 APB102 核心板 DDR4 功能介绍

PH1A400SFG900 DDR4 主要占用 BANK31/32/33,核心板板载 5 颗 16bit 镁光 DDR4 MT40A256M16GE 颗粒，组成 72bit DDR4，支持双 PHY，采用内部参考电压。DDR4 系统结构如下图：

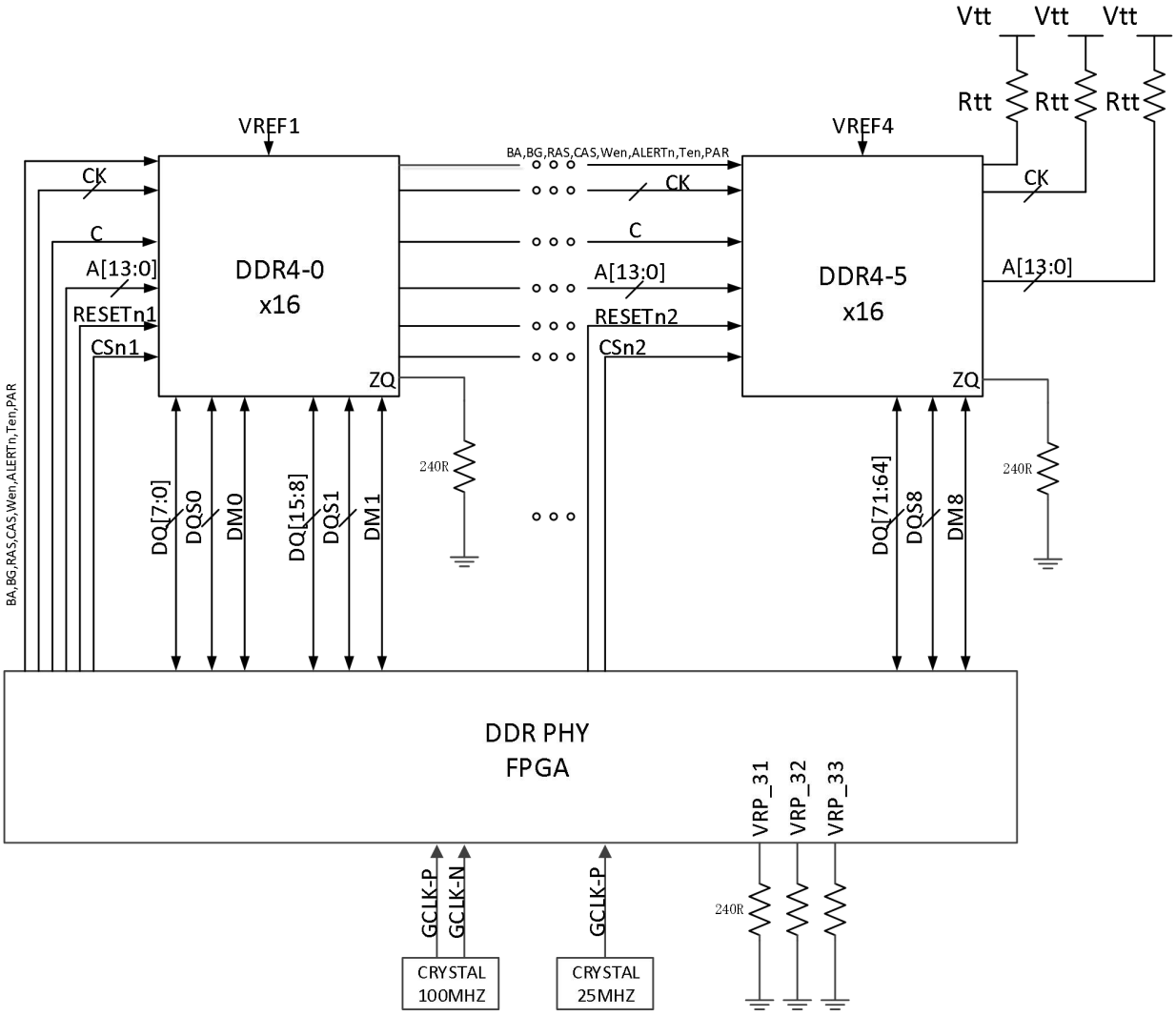

图 3-1 APB102 核心板板 DDR4 系统图

DDR4 预留有测试点，测试点定义见下图：将图片复制保存，放大后可见测试点名称标注。

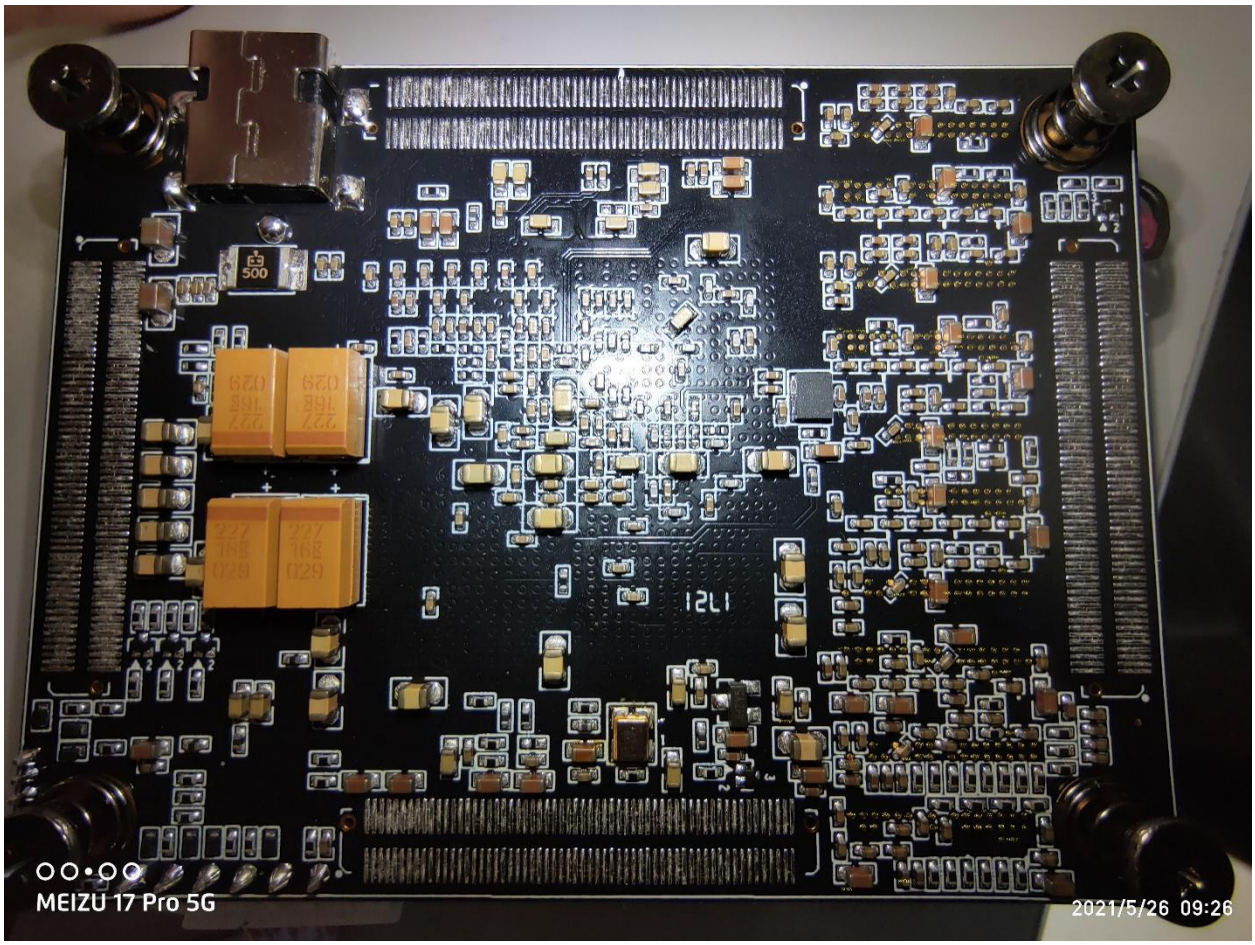

图 3-2　APB102 核心板板 DDR4 测试点

4 APB102 配置板功能介绍

4.1 系统电源配置

系统电源树如下图：

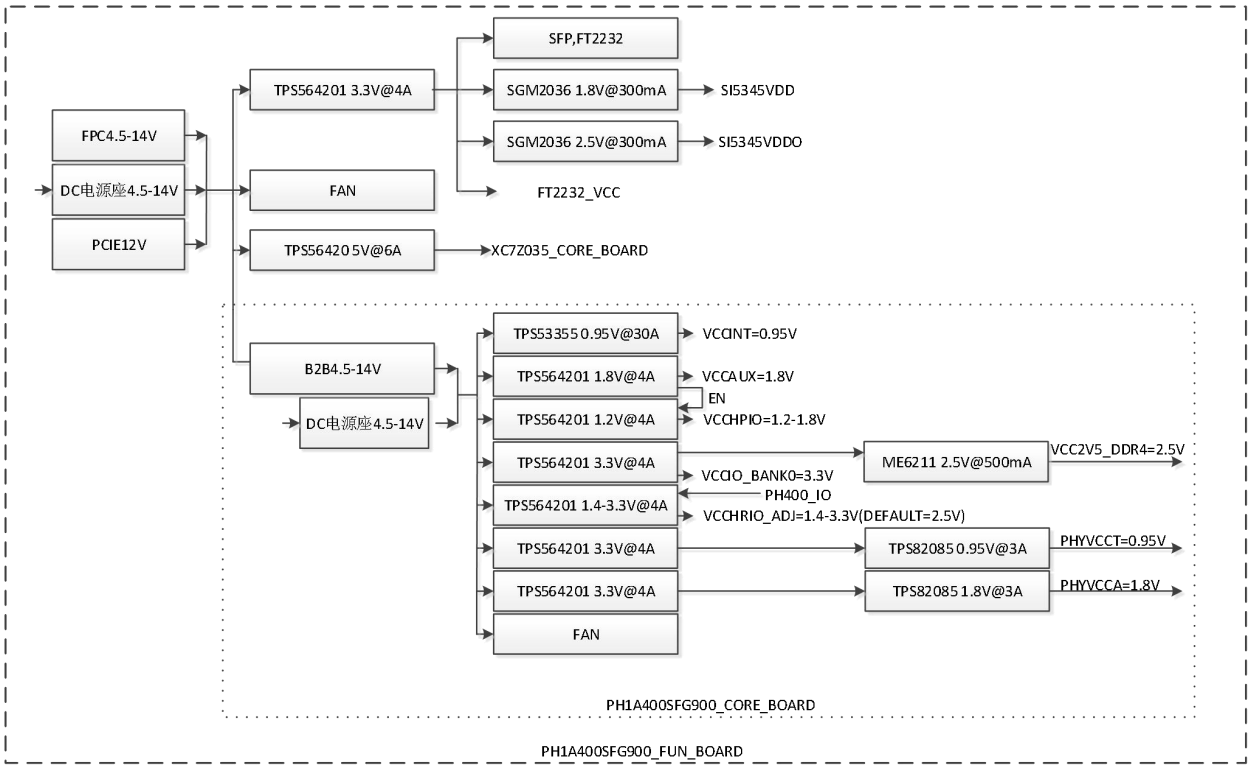

图 4-1 APB102 配置板电源系统

BANK11, BANK12, BANK14, BANK15, BANK16, BANK17 供电电压是可编程电压 1.5V/1.8V/2.5V/3.3V, 通过 FPGA 3 个 IO 程控电压，默认电压是 2.5V。

	VCCADJ_IO_1V8	VCCADJ_IO_2V2	VCCADJ_IO_2V3	
	0	0	0	1.499V
	1	0	0	1.801V
	0	1	0	2.197V
	0	0	1	2.304V
(Deafault)	1	1	0	2.498V
	1	0	1	2.605V
	0	1	1	3.00V
	1	1	1	3.302V

图 4-2 APB102 配置板电源程控表

4.2 系统时钟配置

APB102 配置板系统时钟配置如下：

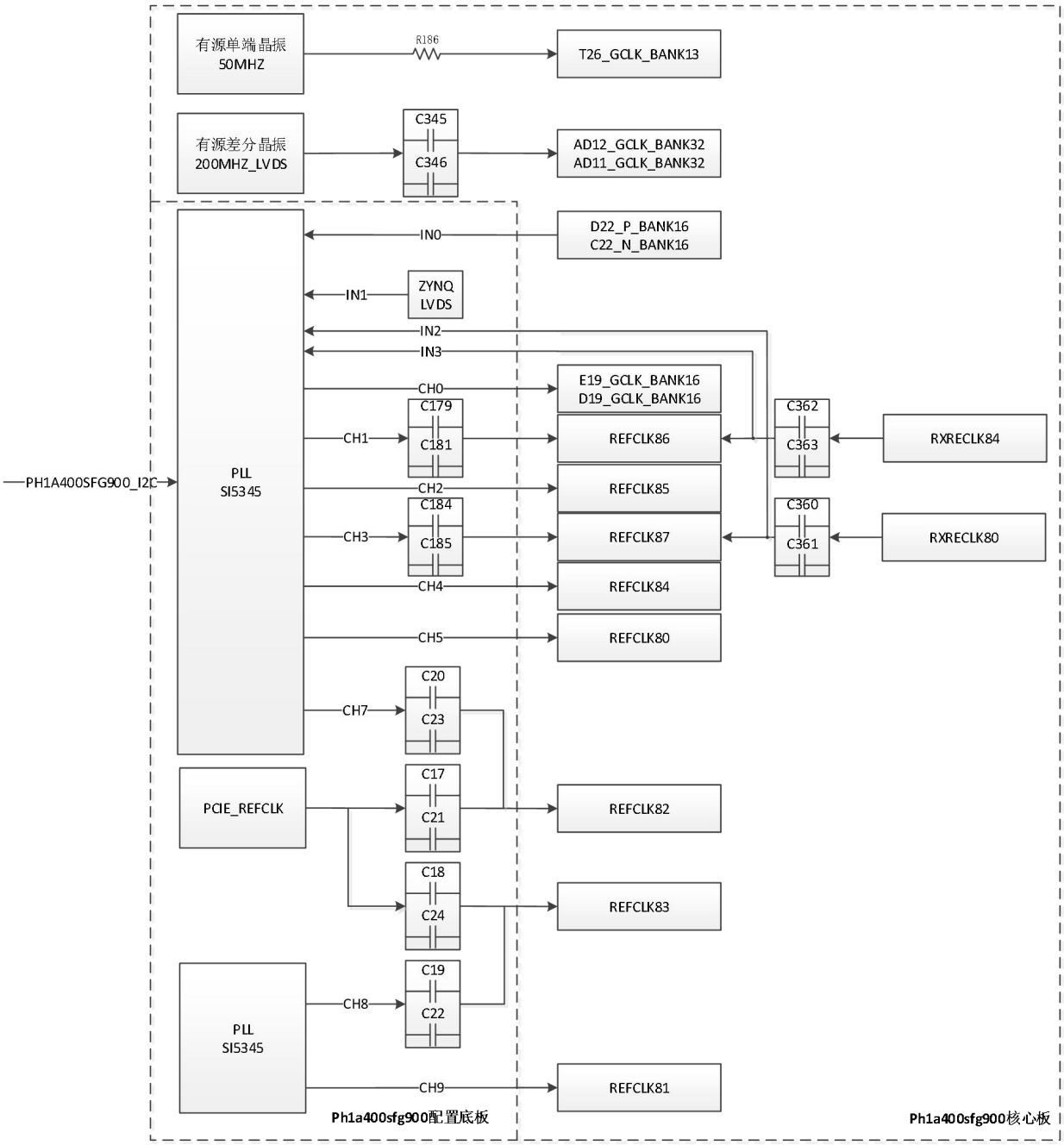

图 4-3 APB102 配置板系统时钟配置

注:1. REFCLK8X 标识 SERDES BANK8X 的参考时钟，例如 REFCLK81 表示 SERDES BANK81 的参考时钟。

2. XX_GCLK_BANKXX 标识全局时钟接入的管脚位置，所在 BANK，例如 T26_GCLK_BANK13 表示时钟由 BANK13 上的 T26 接入芯片内部的全局时钟。

核心板板载 1 颗高精度低抖动 SIT9121 差分时钟芯片，1 颗 50MHZ 单端晶振，底板板载 1 颗高精度锁相环时钟芯片，实际使用时，可根据逻辑需求，焊接或不焊接指定的耦合电容。耦合电容配置如下表。

表 4-1 PH1A400SFG900 配置板时钟源树

PH1A400SFG900 输入/输出时钟	时钟源	贴片电容	不贴片电容
REFCLK80	SI5345_CH5	不可选	
REFCLK81	SI5345_CH9	不可选	
REFCLK82(PCIE)	PCIE_REFCLK（默认时钟源）	C17,C21	C20,C23
	SI5345_CH7	C20,C23	C17,C21
REFCLK83(PCIE)	PCIE_REFCLK（默认时钟源）	C18,C24	C19,C22
	SI5345_CH8	C19,C22	C18,C24
REFCLK84	SI5345_CH4	不可选	
REFCLK85	SI5345_CH2	不可选	
REFCLK86	SI5345_CH1	C179,C181	C362,C363
REFCLK87	SI5345_CH3	C184,C185	C360,C361
E19_GCLK_BANK16 D19_GCLK_BANK16	SI5345_CH0	不可选	
AD12_GCLK_BANK32 AD11_GCLK_BANK32	200MHZ 差分晶振	不可选	
T26_GCLK_BANK13	50MHZ 单端晶振	不可选	

注：与 PH1A400SFG900 PIN 对应关系可参照 PH1A400SFG900 DEMO 板管脚分配表。

4.3 用户扩展 IO

APB102 配置板用户可扩展 USERIO 为差分走线 IO，有 34 IO 供用户拓展使用， IO 包括一个 5V@3A 和一个 3.3V@3A 电压输出。

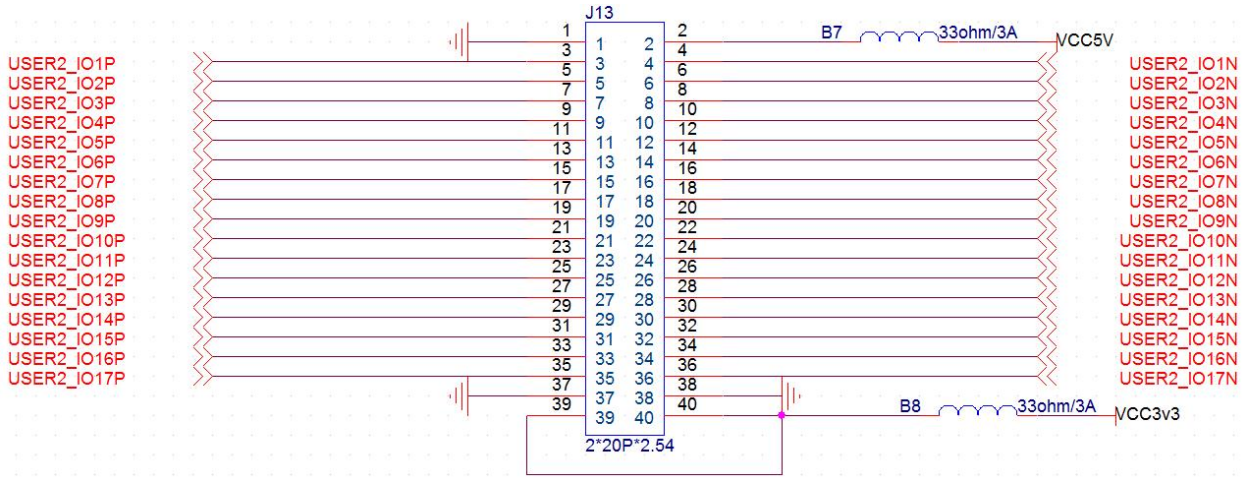

图 4-4 USERIO 接口电路

4.4 USB 转 UART

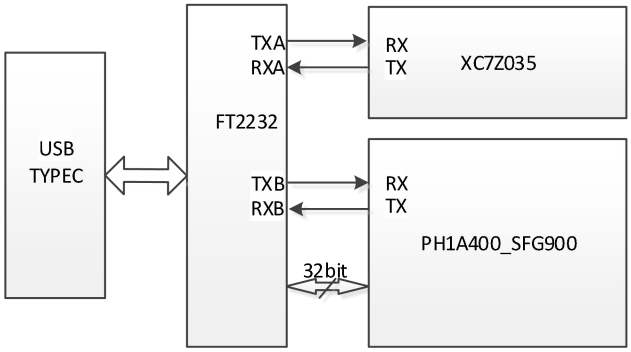

图 4-5 APB102 配置板 UART 连接方式

采用 FT2232 芯片，最高支持 6Mbit 波特率。这里我们只是用 32 位数据线接到 FPGA，其中串口通信端口与 32bit 数据线复用，PORTA 的串口同时接到 XC7Z035 核心板上，做调试接口。USB 采用 TYPEC 接口。与 PH1A400SFG900 PIN 对应关系可参照 PH1A400SFG900 配置板管脚分配。

表 4-2 配置板 FT2232 串口管脚复用表

PH1A400SFG900 管脚	XC7Z035 功能	底板功能
M23	XC7Z035_RXD	FTDI_TCK/FT2232_TXDA
M22	XC7Z035_TXD	FTDI_TDI/FT2232_RXDA
J28	-	FTDI_BC0 /FT2232_RXDB
L25	-	FTDI_BC1 /FT2232_RXDB

FT2232 芯片的 IO 电压具有自动调整功能，FT2232_VCCIO_CON 位于 PH1A400SFG900 的 AF28 管脚上，

此管脚上的高电平，决定了 FT2232_VCCIO 电压。实际使用时候把这个管脚设置为高电平即可实现接口电压自适应。此 IO 不分配，FT2232_VCCIO 默认电平为 2.5V。

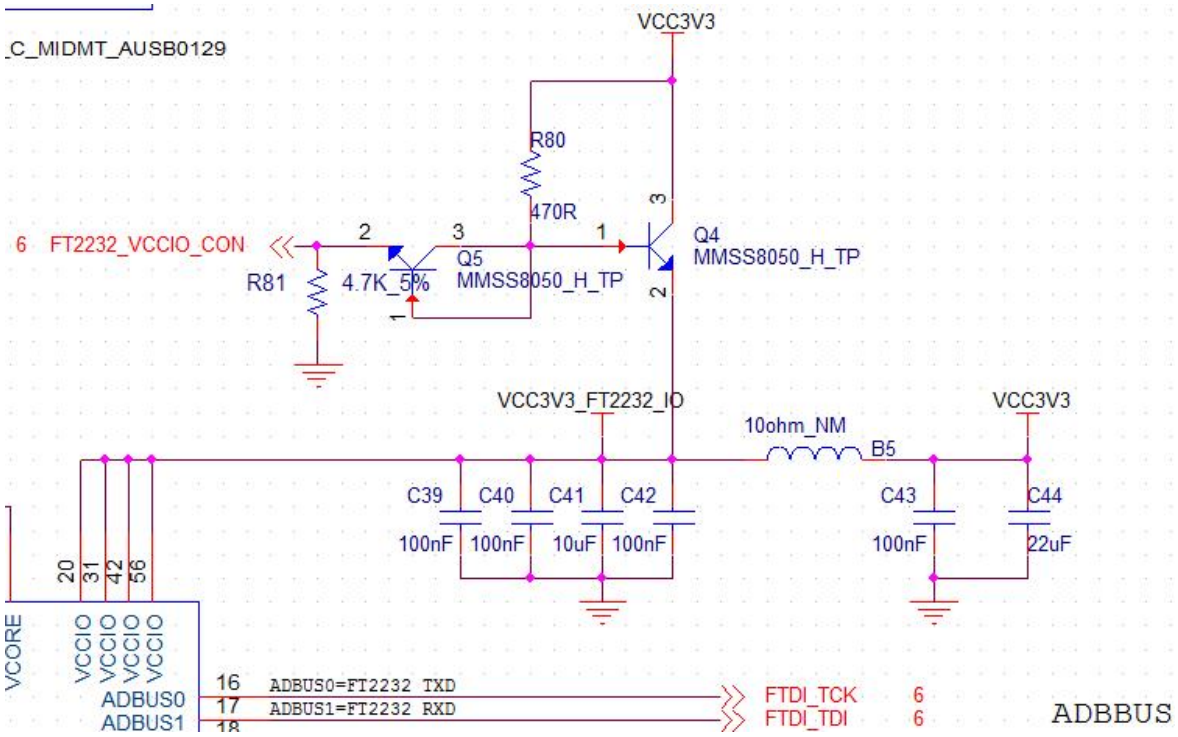

图 4-6 FT2232 电压自适应功能

4.5 按键 LED

APB102 核心板两路按键低电平有效，两路 LED 高电平点亮。

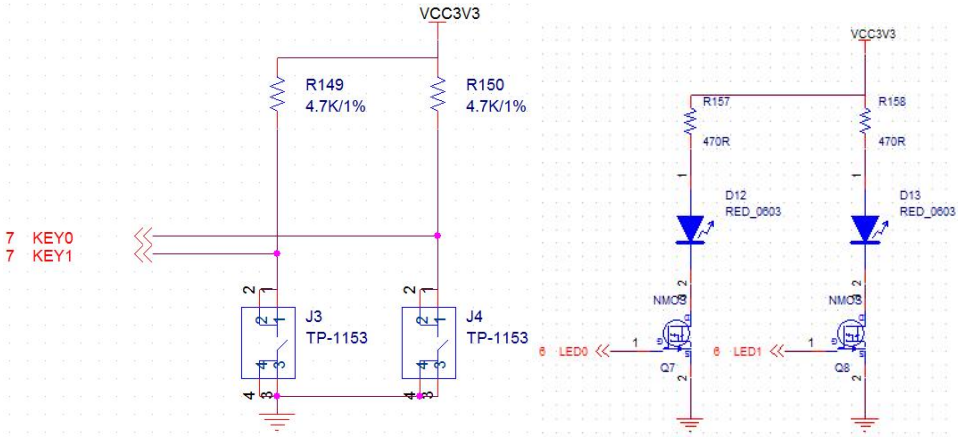

图 4-7 APB102 核心板按键 LED 原理

XC7Z035 核心板两路按键低电平有效，两路 LED 高电平点亮。

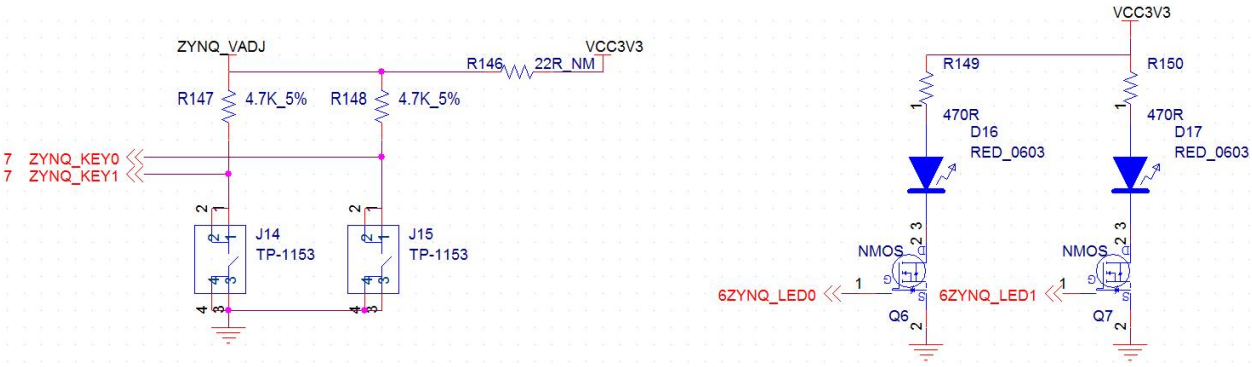

图 4-8 XC7Z035 核心板按键 LED 原理

底板 3 路按键低电平有效，4 路 LED 高电平点亮，按键默认上拉电阻的电源与 PH1A400SFG900 的 VCCIO_ADJ 相连，因此在底板上连接到普通 IO，通过 IO 的高电平来提供上拉电压。使用时需要将 N21，N22 输出高电平，按键才可正常使用。

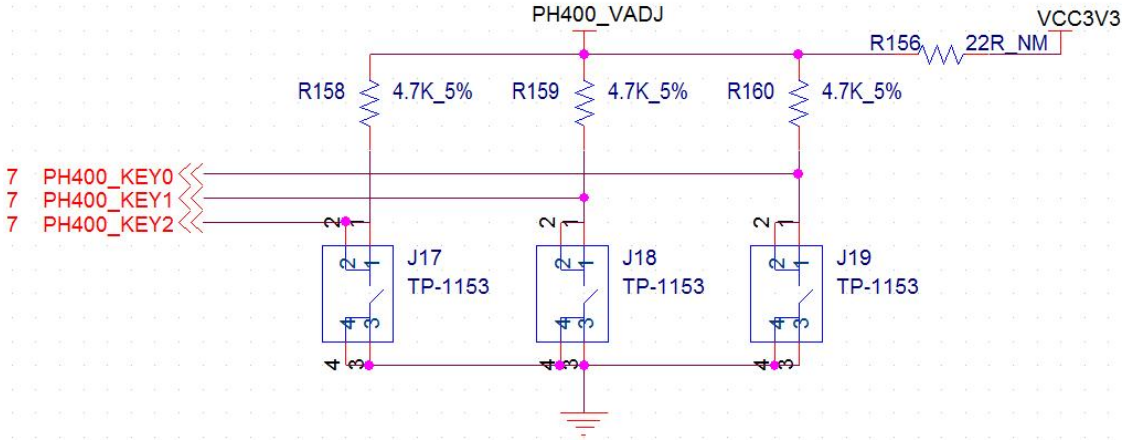

图 4-9 PH1A400SFG900 底板按键原理

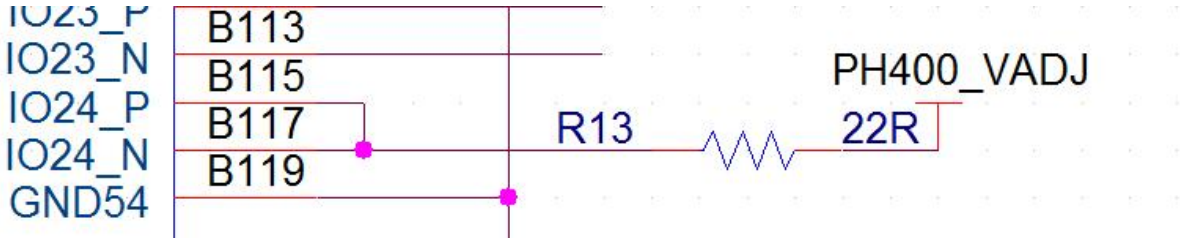

图 4-10 APB102 底板按键供电原理

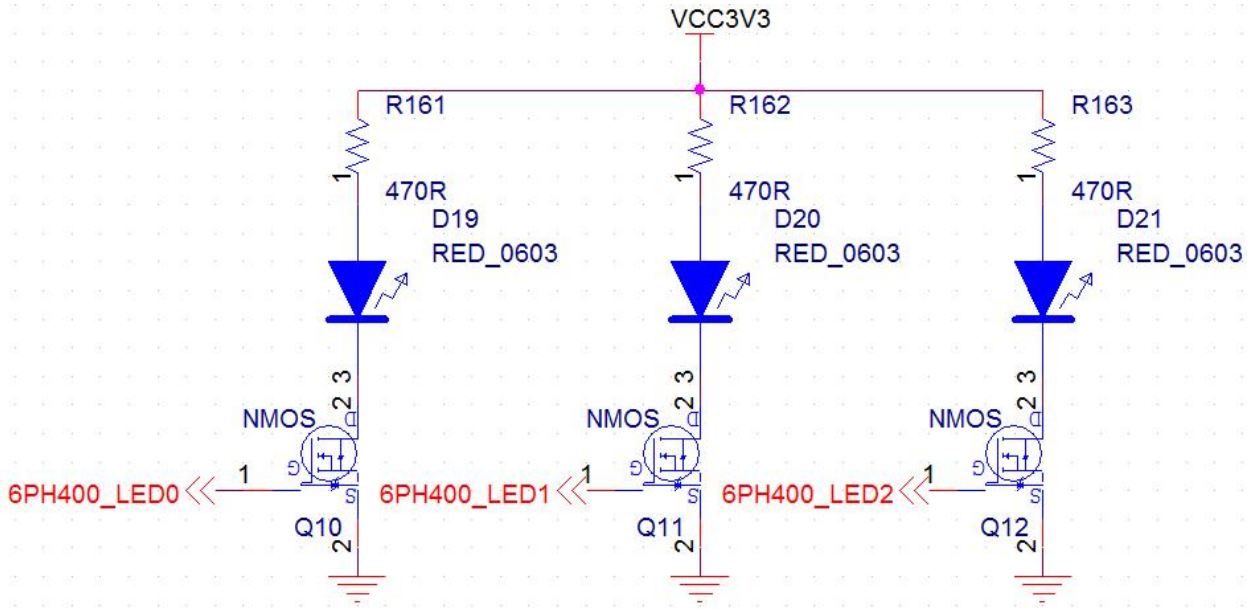

图 4-11 APB102 底板 LED 原理

与 PH1A400SFG900 PIN 对应关系可参照 PH1A400SFG900 配置板管脚分配。

4.6 SERDES 接口

PH1A400SFG900 一共有 16 对 TX/RX，8 对 REFCLK。PH1A400SFG900 每两个通道为 1 组，共用一个参考时钟，其中只有第 2,3 组（BANK82，BANK83）可以用来做 PCIE。本板中将 PCIE 引出到金手指上，4 个通道接 4 路 SFP 光口，其余通道悬空处理。

APB102 DEMO 板 SERDES LINE 功能分布如下图：

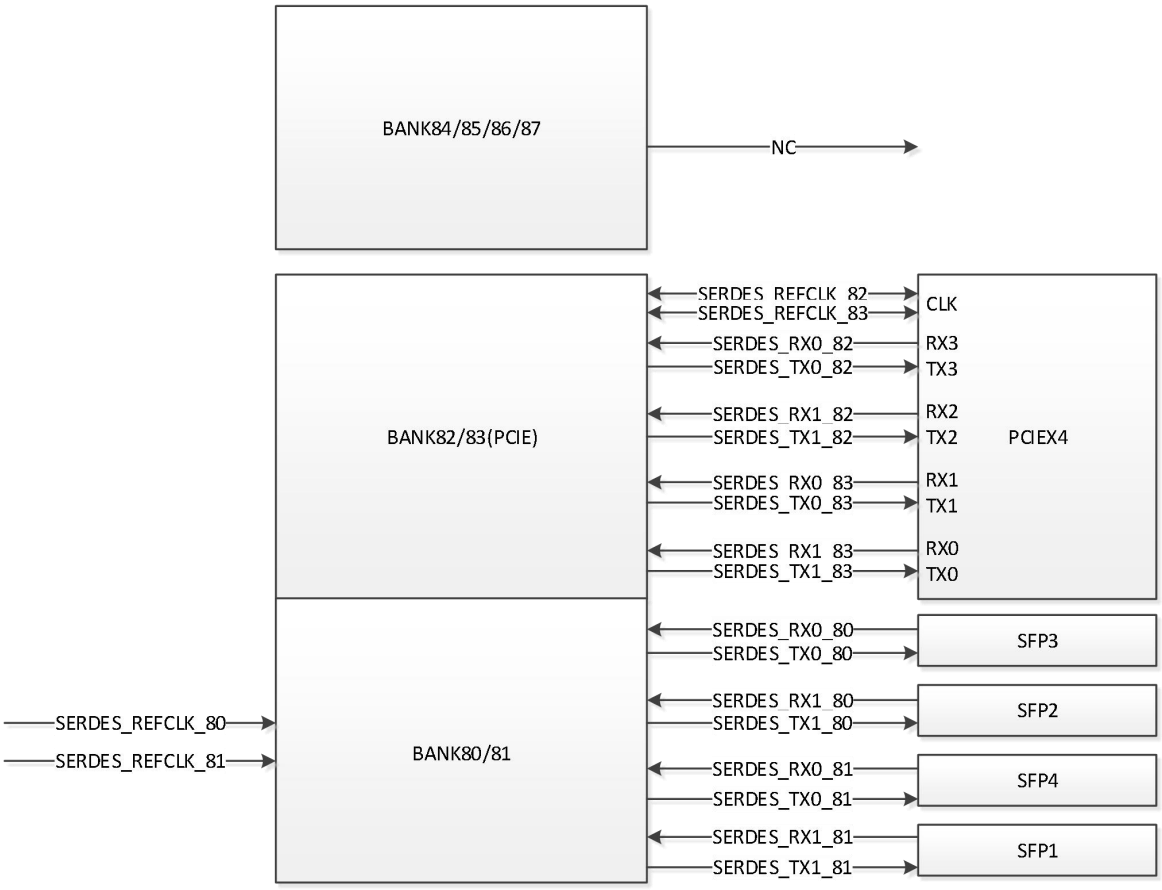

图 4-12 SERDES 系统原理

- PCIE 占用 4 路 serdes+2 路时钟。PCIE 时钟可通过跳线电阻实现时钟的输入输出。
- SFP 占用 4 路 SERDES。
- BANK80/ BANK84 的恢复时钟通过跳线电阻与 REFCLK86，REFCLK87 复用。

与 PH1A400SFG900 PIN 对应关系可参照 PH1A400SFG900 配置板管脚分配。

4.7 配置接口

APB102 核心板默认配置模式为 MSPI 模式，在核心板上不可调整。核心板上 TRSTN,HSWAPEN 两个拨码开关，连接 JTAG，需要将 TRSTN 对于的拨码开关拨到 ON 位置，否则无法连接 JTAG。

APB102 底板通过拨码开关控制 M0,M1,M2 配置状态，当拨码开关全部为 OFF 状态时可通过 7Z035 进行可编程配置。

表 4-3 PH1A400SFG900 配置表

配置模式	M2 M1 M0
主动串行	0 0 0

配置模式	M2 M1 M0
主动 SPI	0 0 1
主动并行	1 0 0
JTAG	x x x
从动并行	1 1 0
从动串行	1 1 1

支持 PH1A400SFG900 的各种加载模式，方便快速测试从动串行 SS、从动并行 SP，JTAG 加载等方式的特性。

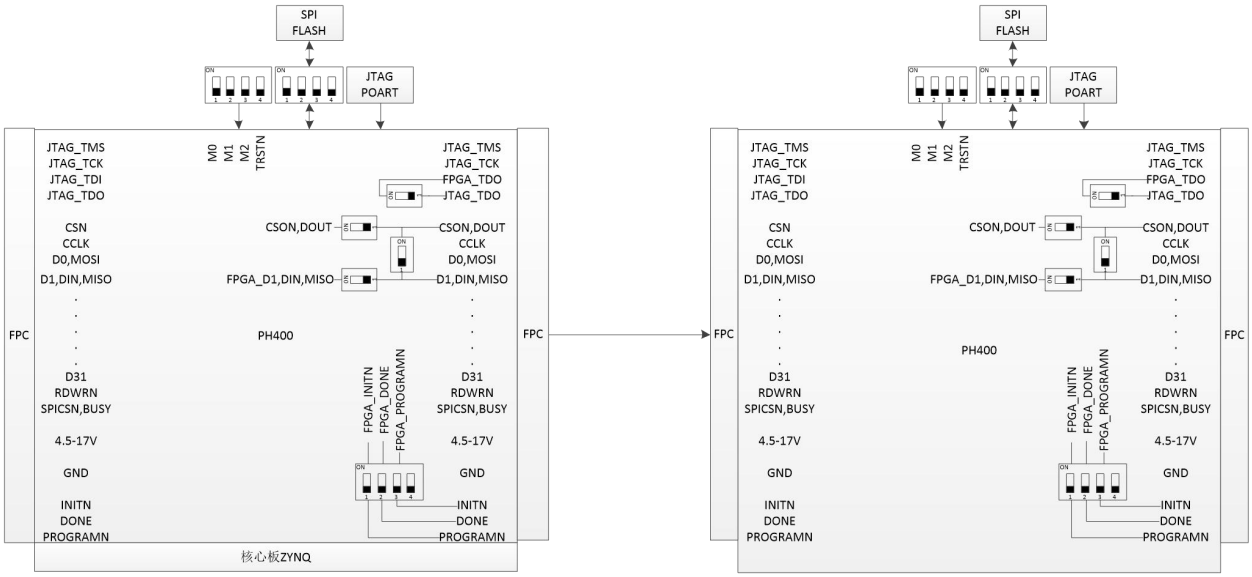

图 4-13 配置系统原理

测试板上设计 60PIN FPC 进行级联扩展。

底板具有板载 JTAG 接口，和板间串行，并行配置输入输出接口。

具有 PROGRAM 按键，DON_ELED 指示。

不同配置模式时需要注意：底板上 J4, J23, J7, J9 拨码开关位置，J23 对应得 M0, M1, M2 在核心板上已经进行了上下拉电阻配置。J4 为级联配置的开关。配置不同模式时需要按照下表配置两组拨码开关。

表 4-4 APB102 配置板配各配置模式下拨码开关状态

配置模式	J23(M2/M1/M0/NC)	J4（级联配置开关）	J7，J9（底板 SPI_Flash 开关）
主动串行	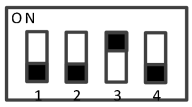	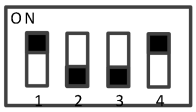	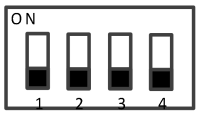 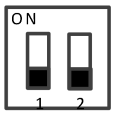

配置模式	J23(M2/M1/M0/NC)	J4（级联配置开关）	J7，J9（底板 SPI_Flash 开关）
主动 SPI	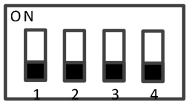	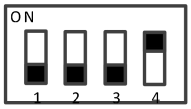	
主动并行	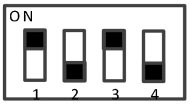	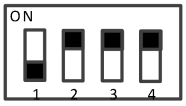	
JTAG 单板	XXXX	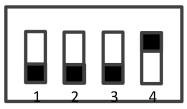	
JTAG 级联		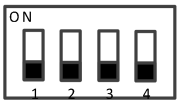	
从动并行	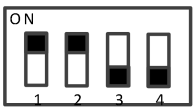	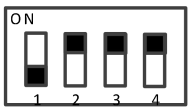	
从动串行	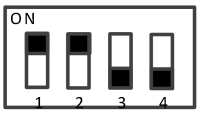	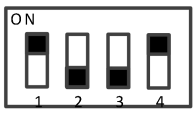	

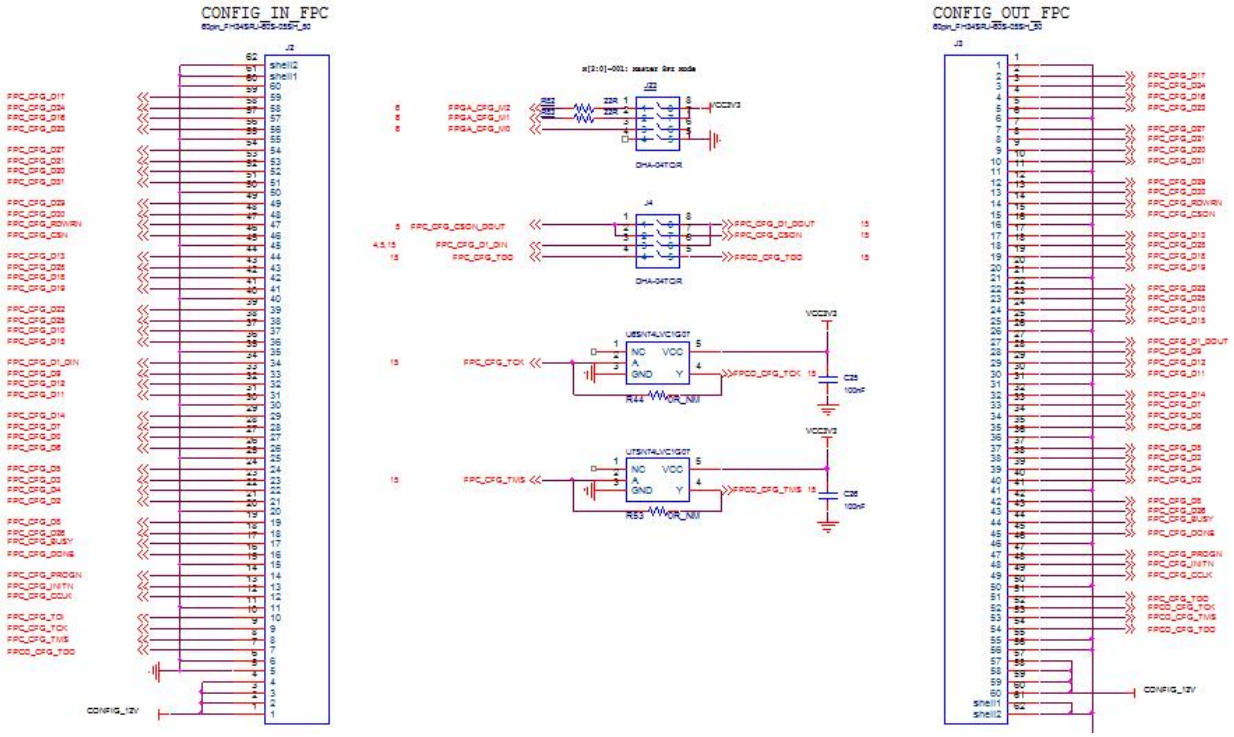

图 4-14 配置系统级联原理图

4.8 FLASH 型号匹配测试

APB102 配置板具有 FLASH 测试功能，具有 WSOP8 和 WSOP16 封装的测试 SOCKET，可兼容 WSOP8，SOP8，WQFN8，QFN8，WSOP16，SOP16 等 FLASH 测试。

测试 FLASH 通过拨码开关 J7，J9 连接到 SPI FLASH 配置 IO 上。测试时需要断开核心板上 FLSAH（去掉 SPI FLASH 配置 IO 上的联通电阻），并把 J7，J9 拨码开关全部拨到 ON 位置。

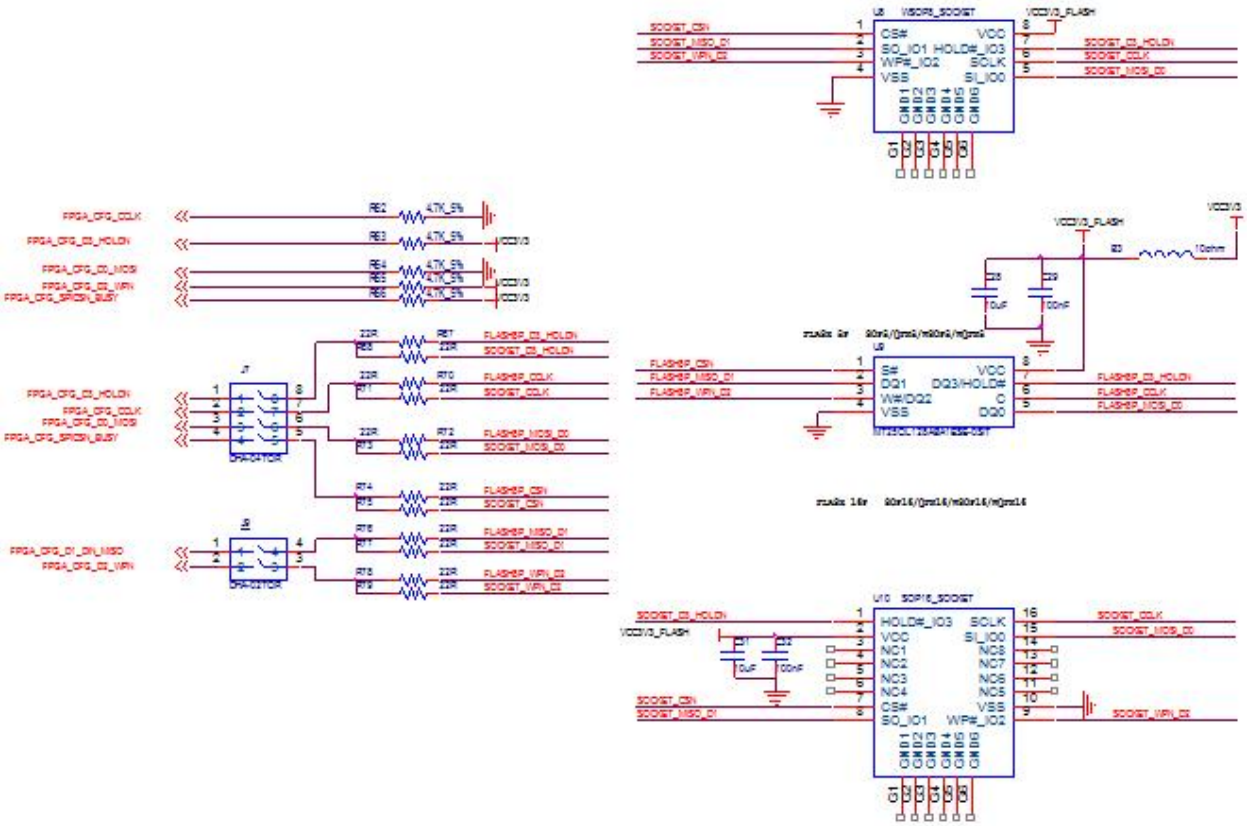

图 4-15　FLASH 测试原理

5 APB102 配置板管脚分配

5.1 APB102 核心板 DDR4 IO 分配

```
set_pin_assignment {DDR4_A0} { LOCATION = AJ9; }#IO_R15P_32,T2_DQS_P_32
set_pin_assignment {DDR4_A1} { LOCATION = AJ11; }#IO_R18N_32,T2
set_pin_assignment {DDR4_A2} { LOCATION = AE9; }#IO_R10N_32,T1
set_pin_assignment {DDR4_A3} { LOCATION = AF12; }#IO_R23P_32,T3
set_pin_assignment {DDR4_A4} { LOCATION = AF11; }#IO_R11N_32,GCLKIOC3_32
set_pin_assignment {DDR4_A5} { LOCATION = AK11; }#IO_R17P_32,T2
set_pin_assignment {DDR4_A6} { LOCATION = AG9; }#IO_R16P_32,GPLL0_32_OUTP
set_pin_assignment {DDR4_A7} { LOCATION = AF13; }#IO_R19N_32,T3_VREF_32
set_pin_assignment {DDR4_A8} { LOCATION = AG10; }#IO_R13P_32,GCLKIOT1_32
set_pin_assignment {DDR4_A9} { LOCATION = AK9; }#IO_R15N_32,T2_DQS_N_32
set_pin_assignment {DDR4_A10} { LOCATION = AF10; }#IO_R14N_32,GCLKIOC0_32
set_pin_assignment {DDR4_A11} { LOCATION = AE8; }#IO_R8N_32,T1
set_pin_assignment {DDR4_A12} { LOCATION = AG13; }#IO_R24P_32,T3
set_pin_assignment {DDR4_A13} { LOCATION = AE13; }#IO_R19P_32,T3
set_pin_assignment {DDR4_ACTN} { LOCATION = AH12; }#IO_R24N_32,T3
set_pin_assignment {DDR4_ALERTN} { LOCATION = AK10; }#IO_R17N_32,T2
set_pin_assignment {DDR4_BA0} { LOCATION = AD9; }#IO_R10P_32,T1
set_pin_assignment {DDR4_BA1} { LOCATION = AJ12; }#IO_R22N_32,T3
set_pin_assignment {DDR4_BG0} { LOCATION = AH9; }#IO_R16N_32,GPLL0_32_OUTN
set_pin_assignment {DDR4_CASN} { LOCATION = AK13; }#IO_R20N_32,T3
set_pin_assignment {DDR4_ODT1} { LOCATION = AH11; }#IO_R18P_32,T2
set_pin_assignment {DDR4_ODT2} { LOCATION = AC10; }#IO_R7N_32,T1
set_pin_assignment {DDR4_PAR} { LOCATION = AE11; }#IO_R11P_32,GCLKIOT3_32
set_pin_assignment {DDR4_RASN} { LOCATION = AK14; }#IO_R20P_32,T3
```

```
set_pin_assignment {DDR4_RESETN} { LOCATION = AB10; }#IO_R7P_32,T1
set_pin_assignment {DDR4_WEN} { LOCATION = AH10; }#IO_R13N_32,GCLKIOC1_32
set_pin_assignment {DDR4_CKE1} { LOCATION = AG12; }#IO_R23N_32,T3
set_pin_assignment {DDR4_CKE2} { LOCATION = AJ13; }#IO_R22P_32,T3
set_pin_assignment {DDR4_CLK1N} { LOCATION = AC11; }#IO_R9N_32,GPLL1_32_OUTN
set_pin_assignment {DDR4_CLK1P} { LOCATION = AC12; }#IO_R9P_32,GPLL1_32_OUTP
set_pin_assignment {DDR4_CLK2N} { LOCATION = AJ14; }#IO_R21N_32,T3_DQS_N_32
set_pin_assignment {DDR4_CLK2P} { LOCATION = AH14; }#IO_R21P_32,T3_DQS_P_32
set_pin_assignment {DDR4_CSN1} { LOCATION = AE10; }#IO_R14P_32,GCLKIOT0_32
set_pin_assignment {DDR4_CSN2} { LOCATION = AD8; }#IO_R8P_32,T1
set_pin_assignment {DDR4_DQ0} { LOCATION = AH2; }#IO_R16P_33,GPLL0_33_OUTP
set_pin_assignment {DDR4_DQ1} { LOCATION = AK1; }#IO_R17N_33,T2
set_pin_assignment {DDR4_DQ2} { LOCATION = AH6; }#IO_R14P_33,GCLKIOT0_33
set_pin_assignment {DDR4_DQ3} { LOCATION = AK3; }#IO_R18N_33,T2
set_pin_assignment {DDR4_DQ4} { LOCATION = AH5; }#IO_R14N_33,GCLKIOC0_33
set_pin_assignment {DDR4_DQ5} { LOCATION = AJ4; }#IO_R13N_33,GCLKIOC1_33
set_pin_assignment {DDR4_DQ6} { LOCATION = AJ1; }#IO_R17P_33,T2
set_pin_assignment {DDR4_DQ7} { LOCATION = AJ2; }#IO_R16N_33,GPLL0_33_OUTN
set_pin_assignment {DDR4_DQS0_N} { LOCATION = AH1; }#IO_R15N_33,T2_DQS_N_33
set_pin_assignment {DDR4_DQS0_P} { LOCATION = AG2; }#IO_R15P_33,T2_DQS_P_33
set_pin_assignment {DDR4_DM0} { LOCATION = AJ3; }#IO_R18P_33,T2
set_pin_assignment {DDR4_DQ8} { LOCATION = AC7; }#IO_R6P_33,T0
set_pin_assignment {DDR4_DQ9} { LOCATION = AE6; }#IO_R5N_33,T0
set_pin_assignment {DDR4_DQ10} { LOCATION = AC5; }#IO_R4P_33,T0
set_pin_assignment {DDR4_DQ11} { LOCATION = AC2; }#IO_R2P_33,T0
set_pin_assignment {DDR4_DQ12} { LOCATION = AD6; }#IO_R5P_33,T0
set_pin_assignment {DDR4_DQ13} { LOCATION = AC1; }#IO_R2N_33,T0
```

```
set_pin_assignment {DDR4_DQ14} { LOCATION = AC4; }#IO_R4N_33,T0
set_pin_assignment {DDR4_DQ15} { LOCATION = AD3; }#IO_R1N_33,T0
set_pin_assignment {DDR4_DQS1_N} { LOCATION = AD1; }#IO_R3N_33,T0_DQS_N_33
set_pin_assignment {DDR4_DQS1_P} { LOCATION = AD2; }#IO_R3P_33,T0_DQS_P_33
set_pin_assignment {DDR4_DM1} { LOCATION = AD4; }#IO_R1P_33,GPFUOUTEN
set_pin_assignment {DDR4_DQ16} { LOCATION = AK6; }#IO_R22N_33,T3
set_pin_assignment {DDR4_DQ17} { LOCATION = AJ8; }#IO_R23P_33,T3
set_pin_assignment {DDR4_DQ18} { LOCATION = AK5; }#IO_R24P_33,T3
set_pin_assignment {DDR4_DQ19} { LOCATION = AF7; }#IO_R20P_33,T3
set_pin_assignment {DDR4_DQ20} { LOCATION = AJ6; }#IO_R22P_33,T3
set_pin_assignment {DDR4_DQ21} { LOCATION = AF8; }#IO_R19P_33,T3
set_pin_assignment {DDR4_DQ22} { LOCATION = AK4; }#IO_R24N_33,T3
set_pin_assignment {DDR4_DQ23} { LOCATION = AK8; }#IO_R23N_33,T3
set_pin_assignment {DDR4_DQS2_N} { LOCATION = AJ7; }#IO_R21N_33,T3_DQS_N_33
set_pin_assignment {DDR4_DQS2_P} { LOCATION = AH7; }#IO_R21P_33,T3_DQS_P_33
set_pin_assignment {DDR4_DM2} { LOCATION = AG7; }#IO_R20N_33,T3
set_pin_assignment {DDR4_DQ24} { LOCATION = AF3; }#IO_R7P_33,T1
set_pin_assignment {DDR4_DQ25} { LOCATION = AG5; }#IO_R12N_33,GCLKIOC2_33
set_pin_assignment {DDR4_DQ26} { LOCATION = AF1; }#IO_R8N_33,T1
set_pin_assignment {DDR4_DQ27} { LOCATION = AF5; }#IO_R11N_33,GCLKIOC3_33
set_pin_assignment {DDR4_DQ28} { LOCATION = AF2; }#IO_R7N_33,T1
set_pin_assignment {DDR4_DQ29} { LOCATION = AF6; }#IO_R12P_33,GCLKIOT2_33
set_pin_assignment {DDR4_DQ30} { LOCATION = AE3; }#IO_R10N_33,T1
set_pin_assignment {DDR4_DQ31} { LOCATION = AE5; }#IO_R11P_33,GCLKIOT3_33
set_pin_assignment {DDR4_DQS3_N} { LOCATION = AG3; }#IO_R9N_33,GPLL1_33_OUTN
set_pin_assignment {DDR4_DQS3_P} { LOCATION = AG4; }#IO_R9P_33,GPLL1_33_OUTP
set_pin_assignment {DDR4_DM3} { LOCATION = AE1; }#IO_R8P_33,GPLL1_33_DIGOUT
```

```
set_pin_assignment {DDR4_DQ32} { LOCATION = AE15; }#IO_R19P_31,T3
set_pin_assignment {DDR4_DQ33} { LOCATION = AA15; }#IO_R20P_31,T3
set_pin_assignment {DDR4_DQ34} { LOCATION = AC14; }#IO_R22P_31,T3
set_pin_assignment {DDR4_DQ35} { LOCATION = Y16; }#IO_R24P_31,T3
set_pin_assignment {DDR4_DQ36} { LOCATION = AD14; }#IO_R22N_31,T3
set_pin_assignment {DDR4_DQ37} { LOCATION = AA16; }#IO_R23N_31,T3
set_pin_assignment {DDR4_DQ38} { LOCATION = AB15; }#IO_R20N_31,T3
set_pin_assignment {DDR4_DQ39} { LOCATION = AA17; }#IO_R23P_31,T3
set_pin_assignment {DDR4_DQS4_N} { LOCATION = AC15; }#IO_R21N_31,T3_DQS_N_31
set_pin_assignment {DDR4_DQS4_P} { LOCATION = AC16; }#IO_R21P_31,T3_DQS_P_31
set_pin_assignment {DDR4_DM4} { LOCATION = Y15; }#IO_R24N_31,T3
set_pin_assignment {DDR4_DQ40} { LOCATION = AD16; }#IO_R14N_31,GCLKIOC0_31
set_pin_assignment {DDR4_DQ41} { LOCATION = AB18; }#IO_R16N_31,GPLL0_31_OUTN
set_pin_assignment {DDR4_DQ42} { LOCATION = AD18; }#IO_R13P_31,GCLKIOT1_31
set_pin_assignment {DDR4_DQ43} { LOCATION = AC17; }#IO_R18N_31,T2
set_pin_assignment {DDR4_DQ44} { LOCATION = AE18; }#IO_R13N_31,GCLKIOC1_31
set_pin_assignment {DDR4_DQ45} { LOCATION = AB17; }#IO_R18P_31,T2
set_pin_assignment {DDR4_DQ46} { LOCATION = AC19; }#IO_R17N_31,T2
set_pin_assignment {DDR4_DQ47} { LOCATION = AB19; }#IO_R17P_31,T2
set_pin_assignment {DDR4_DQ48} { LOCATION = AK15; }#IO_R1N_31,T0
set_pin_assignment {DDR4_DQS5_N} { LOCATION = Y18; }#IO_R15N_31,T2_DQS_N_31
set_pin_assignment {DDR4_DQS5_P} { LOCATION = Y19; }#IO_R15P_31,T2_DQS_P_31
set_pin_assignment {DDR4_DM5} { LOCATION = AD17; }#IO_R14P_31,GCLKIOT0_31
set_pin_assignment {DDR4_DQ49} { LOCATION = AF15; }#IO_R4P_31,T0
set_pin_assignment {DDR4_DQ50} { LOCATION = AG15; }#IO_R2P_31,T0
set_pin_assignment {DDR4_DQ51} { LOCATION = AJ17; }#IO_R5N_31,T0
set_pin_assignment {DDR4_DQ52} { LOCATION = AH15; }#IO_R2N_31,T0
```

```
set_pin_assignment {DDR4_DQ53} { LOCATION = AH17; }#IO_R5P_31,T0
set_pin_assignment {DDR4_DQ54} { LOCATION = AG14; }#IO_R4N_31,T0
set_pin_assignment {DDR4_DQ55} { LOCATION = AK16; }#IO_R1P_31,T0
set_pin_assignment {DDR4_DQ56} { LOCATION = AJ19; }#IO_R7P_31,T1
set_pin_assignment {DDR4_DQS6_N} { LOCATION = AJ16; }#IO_R3N_31,T0_DQS_N_31
set_pin_assignment {DDR4_DQS6_P} { LOCATION = AH16; }#IO_R3P_31,T0_DQS_P_31
set_pin_assignment {DDR4_DM6} { LOCATION = AE16; }#IO_R6P_31,T0
set_pin_assignment {DDR4_DQ57} { LOCATION = AF18; }#IO_R11P_31,GCLKIOT3_31
set_pin_assignment {DDR4_DQ58} { LOCATION = AG18; }#IO_R11N_31,GCLKIOC3_31
set_pin_assignment {DDR4_DQ59} { LOCATION = AF17; }#IO_R12P_31,GCLKIOT2_31
set_pin_assignment {DDR4_DQ60} { LOCATION = AK19; }#IO_R7N_31,T1
set_pin_assignment {DDR4_DQ61} { LOCATION = AE19; }#IO_R10N_31,T1
set_pin_assignment {DDR4_DQ62} { LOCATION = AH19; }#IO_R8N_31,T1
set_pin_assignment {DDR4_DQ63} { LOCATION = AG17; }#IO_R12N_31,GCLKIOC2_31
set_pin_assignment {DDR4_DQS7_N} { LOCATION = AK18; }#IO_R9N_31,GPLL1_31_OUTN
set_pin_assignment {DDR4_DQS7_P} { LOCATION = AJ18; }#IO_R9P_31,GPLL1_31_OUTP
set_pin_assignment {DDR4_DM7} { LOCATION = AG19; }#IO_R8P_31,T1
set_pin_assignment {DDR4_DQ64} { LOCATION = AB12; }#IO_R1N_32,T0
set_pin_assignment {DDR4_DQ65} { LOCATION = Y11; }#IO_R4P_32,T0
set_pin_assignment {DDR4_DQ66} { LOCATION = AA8; }#IO_R2P_32,T0
set_pin_assignment {DDR4_DQ67} { LOCATION = AA11; }#IO_R5P_32,T0
set_pin_assignment {DDR4_DQ68} { LOCATION = AA10; }#IO_R5N_32,T0
set_pin_assignment {DDR4_DQ69} { LOCATION = AA13; }#IO_R6P_32,T0
set_pin_assignment {DDR4_DQ70} { LOCATION = AB8; }#IO_R2N_32,T0
set_pin_assignment {DDR4_DQ71} { LOCATION = AA12; }#IO_R1P_32,T0
set_pin_assignment {DDR4_DQS8_N} { LOCATION = AC9; }#IO_R3N_32,T0_DQS_N_32
set_pin_assignment {DDR4_DQS8_P} { LOCATION = AB9; }#IO_R3P_32,T0_DQS_P_32
```

```
set_pin_assignment {DDR4_DM8} { LOCATION = Y10; }#IO_R4N_32,T0
set_pin_assignment {FPGA_SYSCLK_200MHZ_LVDS_N} { LOCATION = AD11; }
#IO_R12N_32,GCLKIOC2_32
set_pin_assignment {FPGA_SYSCLK_200MHZ_LVDS_P} { LOCATION = AD12; }
#IO_R12P_32,GCLKIOT2_32}
```

5.2 APB102 核心板用户 IO 分配

```
set_pin_assignment {JTAG_TEST_TCK} { LOCATION = A11; }#IO_L17P_17
set_pin_assignment {JTAG_TEST_TDI} { LOCATION = A13; }#IO_L22N_17
set_pin_assignment {JTAG_TEST_TDO} { LOCATION = A12; }#IO_L17N_17
set_pin_assignment {JTAG_TEST_TMS} { LOCATION = B13; }#IO_L22P_17
set_pin_assignment {IO1_N} { LOCATION = AF30; }#IO_L16N_12,GPLL0_12_OUTN
set_pin_assignment {IO1_P} { LOCATION = AE30; }#IO_L16P_12,GPLL0_12_OUTP
set_pin_assignment {IO2_N} { LOCATION = AA28; }#IO_L3N_12
set_pin_assignment {IO2_P} { LOCATION = Y28; }#IO_L3P_12
set_pin_assignment {IO3_N} { LOCATION = AE29; }#IO_L9N_12,GPLL1_12_OUTN
set_pin_assignment {IO3_P} { LOCATION = AD29; }#IO_L9P_12,GPLL1_12_OUTP
set_pin_assignment {IO4_N} { LOCATION = AC30; }#IO_L7N_12
set_pin_assignment {IO4_P} { LOCATION = AC29; }#IO_L7P_12
set_pin_assignment {IO5_N} { LOCATION = AB28; }#IO_L5N_12
set_pin_assignment {IO5_P} { LOCATION = AA27; }#IO_L5P_12
set_pin_assignment {IO6_N} { LOCATION = AE28; }#IO_L14P_12,GCLKIOT0_12
set_pin_assignment {IO6_P} { LOCATION = AF28; }#IO_L14N_12,GCLKIOC0_12
set_pin_assignment {IO7_N} { LOCATION = AD28; }#IO_L11N_12,GCLKIOC3_12
set_pin_assignment {IO7_P} { LOCATION = AD27; }#IO_L11P_12,GCLKIOT3_12
set_pin_assignment {IO8_N} { LOCATION = AK30; }#IO_L15N_12
set_pin_assignment {IO8_P} { LOCATION = AK29; }#IO_L15P_12
```

```
set_pin_assignment {IO9_N} { LOCATION = AK28; }#IO_L20N_12
set_pin_assignment {IO9_P} { LOCATION = AJ27; }#IO_L20P_12
set_pin_assignment {IO10_N} { LOCATION = AF25; }#IO_L16N_11,GPLL0_11_OUTN
set_pin_assignment {IO10_P} { LOCATION = AE25; }#IO_L16P_11,GPLL0_11_OUTP
set_pin_assignment {IO11_N} { LOCATION = AJ29; }#IO_L17N_12
set_pin_assignment {IO11_P} { LOCATION = AJ28; }#IO_L17P_12
set_pin_assignment {IO12_N} { LOCATION = AH25; }#IO_L18N_11
set_pin_assignment {IO12_P} { LOCATION = AG25; }#IO_L18P_11
set_pin_assignment {IO13_N} { LOCATION = AH24; }#IO_L14N_11,GCLKIOC0_11
set_pin_assignment {IO13_P} { LOCATION = AG24; }#IO_L14P_11,GCLKIOT0_11
set_pin_assignment {IO14_N} { LOCATION = AK25; }#IO_L15N_11
set_pin_assignment {IO14_P} { LOCATION = AJ24; }#IO_L15P_11
set_pin_assignment {IO15_N} { LOCATION = AK24; }#IO_L17N_11
set_pin_assignment {IO15_P} { LOCATION = AK23; }#IO_L17P_11
set_pin_assignment {IO16_N} { LOCATION = AJ21; }#IO_L23N_11
set_pin_assignment {IO16_P} { LOCATION = AH21; }#IO_L23P_11
set_pin_assignment {IO17_N} { LOCATION = AF21; }#IO_L19N_11
set_pin_assignment {IO17_P} { LOCATION = AF20; }#IO_L19P_11
set_pin_assignment {IO18_N} { LOCATION = AH22; }#IO_L20N_11
set_pin_assignment {IO18_P} { LOCATION = AG22; }#IO_L20P_11
set_pin_assignment {IO19_N} { LOCATION = AB20; }#IO_L6N_11
set_pin_assignment {IO19_P} { LOCATION = AA20; }#IO_L6P_11
set_pin_assignment {IO20_N} { LOCATION = AD22; }#IO_L8N_11
set_pin_assignment {IO20_P} { LOCATION = AC22; }#IO_L8P_11
set_pin_assignment {IO21_N} { LOCATION = AF23; }#IO_L11N_11,GCLKIOC3_11
set_pin_assignment {IO21_P} { LOCATION = AE23; }#IO_L11P_11,GCLKIOT3_11
set_pin_assignment {IO22_N} { LOCATION = AC21; }#IO_L5N_11
```

```
set_pin_assignment {IO22_P} { LOCATION = AC20; }#IO_L5P_11
set_pin_assignment {IO23_N} { LOCATION = L18; }#IO_L5N_16
set_pin_assignment {IO23_P} { LOCATION = L17; }#IO_L5P_16
set_pin_assignment {IO24_N} { LOCATION = N22; }#IO_L20N_14
set_pin_assignment {IO24_P} { LOCATION = N21; }#IO_L20P_14
set_pin_assignment {IO47_N} { LOCATION = L20; }#IO_L6N_14
set_pin_assignment {IO47_P} { LOCATION = M20; }#IO_L6P_14
set_pin_assignment {IO48_N} { LOCATION = J22; }#IO_L5N_14
set_pin_assignment {IO48_P} { LOCATION = J21; }#IO_L5P_14
set_pin_assignment {IO49_N} { LOCATION = K21; }#IO_L4N_14
set_pin_assignment {IO49_P} { LOCATION = L21; }#IO_L4P_14
set_pin_assignment {IO50_N} { LOCATION = J24; }#IO_L1N_14
set_pin_assignment {IO50_P} { LOCATION = J23; }#IO_L1P_14
set_pin_assignment {IO51_N} { LOCATION = K24; }#IO_L3N_14
set_pin_assignment {IO51_P} { LOCATION = K23; }#IO_L3P_14
set_pin_assignment {IO52_N} { LOCATION = K25; }#IO_L12N_14,GCLKIOC2_14
set_pin_assignment {IO52_P} { LOCATION = L25; }#IO_L12P_14,GCLKIOT2_14
set_pin_assignment {IO53_N} { LOCATION = L23; }#IO_L2N_14
set_pin_assignment {IO53_P} { LOCATION = L22; }#IO_L2P_14
set_pin_assignment {IO54_N} { LOCATION = J28; }#IO_L8N_14
set_pin_assignment {IO54_P} { LOCATION = J27; }#IO_L8P_14
set_pin_assignment {IO55_N} { LOCATION = J26; }#IO_L10N_14
set_pin_assignment {IO55_P} { LOCATION = K26; }#IO_L10P_14
set_pin_assignment {IO56_N} { LOCATION = K29; }#IO_L13N_14,GCLKIOC1_14
set_pin_assignment {IO56_P} { LOCATION = K28; }#IO_L13P_14,GCLKIOT1_14
set_pin_assignment {IO57_N} { LOCATION = H29; }#IO_L7N_14
set_pin_assignment {IO57_P} { LOCATION = J29; }#IO_L7P_14
```

```
set_pin_assignment {IO58_N} { LOCATION = L28; }#IO_L14N_14,GCLKIOC0_14
set_pin_assignment {IO58_P} { LOCATION = M28; }#IO_L14P_14,GCLKIOT0_14
set_pin_assignment {IO59_N} { LOCATION = K30; }#IO_L9N_14,GPLL1_14_OUTN
set_pin_assignment {IO59_P} { LOCATION = L30; }#IO_L9P_14,GPLL1_14_OUTP
set_pin_assignment {IO60_N} { LOCATION = N30; }#IO_L17N_14
set_pin_assignment {IO60_P} { LOCATION = N29; }#IO_L17P_14
set_pin_assignment {IO61_N} { LOCATION = M30; }#IO_L15N_14
set_pin_assignment {IO61_P} { LOCATION = M29; }#IO_L15P_14
set_pin_assignment {IO62_N} { LOCATION = L27; }#IO_L11N_14,GCLKIOC3_14
set_pin_assignment {IO62_P} { LOCATION = L26; }#IO_L11P_14,GCLKIOT3_14
set_pin_assignment {IO63_N} { LOCATION = M27; }#IO_L16N_14,GPLL0_14_OUTN
set_pin_assignment {IO63_P} { LOCATION = N27; }#IO_L16P_14,GPLL0_14_OUTP
set_pin_assignment {IO64_N} { LOCATION = N26; }#IO_L18N_14
set_pin_assignment {IO64_P} { LOCATION = N25; }#IO_L18P_14
set_pin_assignment {IO65_N} { LOCATION = Y29; }#IO_L4N_12
set_pin_assignment {IO65_P} { LOCATION = W29; }#IO_L4P_12
set_pin_assignment {IO66_N} { LOCATION = N24; }#IO_L21N_14
set_pin_assignment {IO66_P} { LOCATION = P23; }#IO_L21P_14
set_pin_assignment {IO67_N} { LOCATION = M25; }#IO_L23N_14
set_pin_assignment {IO67_P} { LOCATION = M24; }#IO_L23P_14
set_pin_assignment {IO68_N} { LOCATION = P22; }#IO_L22N_14
set_pin_assignment {IO68_P} { LOCATION = P21; }#IO_L22P_14
set_pin_assignment {IO69_N} { LOCATION = M23; }#IO_L24N_14
set_pin_assignment {IO69_P} { LOCATION = M22; }#IO_L24P_14
set_pin_assignment {IO70_N} { LOCATION = N20; }#IO_L19N_14
set_pin_assignment {IO70_P} { LOCATION = N19; }#IO_L19P_14
set_pin_assignment {IO71_N} { LOCATION = AB30; }#IO_L10N_12
```

```
set_pin_assignment {IO71_P} { LOCATION = AB29; }#IO_L10P_12
set_pin_assignment {IO72_N} { LOCATION = AA26; }#IO_L1N_12
set_pin_assignment {IO72_P} { LOCATION = Y26; }#IO_L1P_12
set_pin_assignment {IO73_N} { LOCATION = AA23; }#IO_L4N_11
set_pin_assignment {IO73_P} { LOCATION = AA22; }#IO_L4P_11
set_pin_assignment {IO74_N} { LOCATION = AD26; }#IO_L19N_12
set_pin_assignment {IO74_P} { LOCATION = AC26; }#IO_L19P_12
set_pin_assignment {IO75_N} { LOCATION = AB25; }#IO_L6N_12
set_pin_assignment {IO75_P} { LOCATION = AA25; }#IO_L6P_12
set_pin_assignment {IO76_N} { LOCATION = W28; }#IO_L2N_12
set_pin_assignment {IO76_P} { LOCATION = W27; }#IO_L2P_12
set_pin_assignment {IO77_N} { LOCATION = AC25; }#IO_L7N_11
set_pin_assignment {IO77_P} { LOCATION = AB24; }#IO_L7P_11
set_pin_assignment {IO78_N} { LOCATION = AC27; }#IO_L12N_12,GCLKIOC2_12
set_pin_assignment {IO78_P} { LOCATION = AB27; }#IO_L12P_12,GCLKIOT2_12
set_pin_assignment {IO79_N} { LOCATION = AG28; }#IO_L21N_12
set_pin_assignment {IO79_P} { LOCATION = AG27; }#IO_L21P_12
set_pin_assignment {IO80_N} { LOCATION = AH30; }#IO_L18N_12
set_pin_assignment {IO80_P} { LOCATION = AG30; }#IO_L18P_12
set_pin_assignment {IO81_N} { LOCATION = AH29; }#IO_L13N_12,GCLKIOC1_12
set_pin_assignment {IO81_P} { LOCATION = AG29; }#IO_L13P_12,GCLKIOT1_12
set_pin_assignment {IO82_N} { LOCATION = AH27; }#IO_L22N_12
set_pin_assignment {IO82_P} { LOCATION = AH26; }#IO_L22P_12
set_pin_assignment {IO83_N} { LOCATION = AK26; }#IO_L24N_12
set_pin_assignment {IO83_P} { LOCATION = AJ26; }#IO_L24P_12
set_pin_assignment {IO84_N} { LOCATION = AE24; }#IO_L12N_11,GCLKIOC2_11
set_pin_assignment {IO84_P} { LOCATION = AD23; }#IO_L12P_11,GCLKIOT2_11
```

```
set_pin_assignment {IO85_N} { LOCATION = AJ23; }#IO_L21N_11
set_pin_assignment {IO85_P} { LOCATION = AJ22; }#IO_L21P_11
set_pin_assignment {IO86_N} { LOCATION = AK21; }#IO_L24N_11
set_pin_assignment {IO86_P} { LOCATION = AK20; }#IO_L24P_11
set_pin_assignment {IO87_N} { LOCATION = AH20; }#IO_L22N_11
set_pin_assignment {IO87_P} { LOCATION = AG20; }#IO_L22P_11
set_pin_assignment {IO88_N} { LOCATION = AE21; }#IO_L10N_11
set_pin_assignment {IO88_P} { LOCATION = AD21; }#IO_L10P_11
set_pin_assignment {IO89_N} { LOCATION = AA21; }#IO_L2N_11
set_pin_assignment {IO89_P} { LOCATION = Y21; }#IO_L2P_11
set_pin_assignment {IO90_N} { LOCATION = AB23; }#IO_L3N_11
set_pin_assignment {IO90_P} { LOCATION = AB22; }#IO_L3P_11
set_pin_assignment {IO91_N} { LOCATION = Y24; }#IO_L1N_11
set_pin_assignment {IO91_P} { LOCATION = Y23; }#IO_L1P_11
set_pin_assignment {IO92_N} { LOCATION = AD24; }#IO_L9N_11,GPLL1_11_OUTN
set_pin_assignment {IO92_P} { LOCATION = AC24; }#IO_L9P_11,GPLL1_11_OUTP
set_pin_assignment {IO93_N} { LOCATION = AF27; }#IO_L23N_12
set_pin_assignment {IO93_P} { LOCATION = AF26; }#IO_L23P_12
set_pin_assignment {IO94_N} { LOCATION = AG23; }#IO_L13N_11,GCLKIOC1_11
set_pin_assignment {IO94_P} { LOCATION = AF22; }#IO_L13P_11,GCLKIOT1_11
set_pin_assignment {IO95_N} { LOCATION = J18; }#IO_L1N_16
set_pin_assignment {IO95_P} { LOCATION = K18; }#IO_L1P_16
set_pin_assignment {IO96_N} { LOCATION = H19; }#IO_L4N_16
set_pin_assignment {IO96_P} { LOCATION = J19; }#IO_L4P_16
set_pin_assignment {IO97_N} { LOCATION = H17; }#IO_L3N_16
set_pin_assignment {IO97_P} { LOCATION = J17; }#IO_L3P_16
set_pin_assignment {IO98_N} { LOCATION = F18; }#IO_L16N_16,GPLL0_16_OUTN
```

```
set_pin_assignment {IO98_P} { LOCATION = G18; }#IO_L16P_16,GPLL0_16_OUTP
set_pin_assignment {IO99_N} { LOCATION = F17; }#IO_L18N_16
set_pin_assignment {IO99_P} { LOCATION = G17; }#IO_L18P_16
set_pin_assignment {IO100_N} { LOCATION = G20; }#IO_L2N_16
set_pin_assignment {IO100_P} { LOCATION = H20; }#IO_L2P_16
set_pin_assignment {IO101_N} { LOCATION = D19; }#IO_L14N_16,GCLKIOC0_16
set_pin_assignment {IO101_P} { LOCATION = E19; }#IO_L14P_16,GCLKIOT0_16
set_pin_assignment {IO102_N} { LOCATION = C16; }#IO_L15N_16
set_pin_assignment {IO102_P} { LOCATION = D16; }#IO_L15P_16
set_pin_assignment {IO103_N} { LOCATION = D18; }#IO_L13N_16,GCLKIOC1_16
set_pin_assignment {IO103_P} { LOCATION = D17; }#IO_L13P_16,GCLKIOT1_16
set_pin_assignment {IO104_N} { LOCATION = B17; }#IO_L17N_16
set_pin_assignment {IO104_P} { LOCATION = C17; }#IO_L17P_16
set_pin_assignment {IO105_N} { LOCATION = A17; }#IO_L20N_16
set_pin_assignment {IO105_P} { LOCATION = A16; }#IO_L20P_16
set_pin_assignment {IO106_N} { LOCATION = A18; }#IO_L22N_16
set_pin_assignment {IO106_P} { LOCATION = B18; }#IO_L22P_16
set_pin_assignment {IO107_N} { LOCATION = E20; }#IO_L12N_16,GCLKIOC2_16
set_pin_assignment {IO107_P} { LOCATION = F20; }#IO_L12P_16,GCLKIOT2_16
set_pin_assignment {IO108_N} { LOCATION = B20; }#IO_L19N_16
set_pin_assignment {IO108_P} { LOCATION = C20; }#IO_L19P_16
set_pin_assignment {IO109_N} { LOCATION = A21; }#IO_L21N_16
set_pin_assignment {IO109_P} { LOCATION = A20; }#IO_L21P_16
set_pin_assignment {IO110_N} { LOCATION = C21; }#IO_L8N_16
set_pin_assignment {IO110_P} { LOCATION = D21; }#IO_L8P_16
set_pin_assignment {IO111_N} { LOCATION = C22; }#IO_L10N_16
set_pin_assignment {IO111_P} { LOCATION = D22; }#IO_L10P_16
```

```
set_pin_assignment {IO112_N} { LOCATION = E21; }#IO_L11N_16,GCLKIOC3_16
set_pin_assignment {IO112_P} { LOCATION = F21; }#IO_L11P_16,GCLKIOT3_16
set_pin_assignment {IO113_N} { LOCATION = F22; }#IO_L9N_16,GPLL1_16_OUTN
set_pin_assignment {IO113_P} { LOCATION = G22; }#IO_L9P_16,GPLL1_16_OUTP
set_pin_assignment {IO114_N} { LOCATION = H22; }#IO_L7N_16
set_pin_assignment {IO114_P} { LOCATION = H21; }#IO_L7P_16
set_pin_assignment {IO115_N} { LOCATION = H27; }#IO_L23N_15
set_pin_assignment {IO115_P} { LOCATION = H26; }#IO_L23P_15
set_pin_assignment {IO116_N} { LOCATION = K20; }#IO_L6N_16
set_pin_assignment {IO116_P} { LOCATION = K19; }#IO_L6P_16
set_pin_assignment {IO119_N} { LOCATION = C27; }#IO_L13N_15,GCLKIOC1_15
set_pin_assignment {IO119_P} { LOCATION = D27; }#IO_L13P_15,GCLKIOT1_15
set_pin_assignment {IO120_N} { LOCATION = D24; }#IO_L4N_15
set_pin_assignment {IO120_P} { LOCATION = E24; }#IO_L4P_15
set_pin_assignment {IO121_N} { LOCATION = B19; }#IO_L24N_16
set_pin_assignment {IO121_P} { LOCATION = C19; }#IO_L24P_16
set_pin_assignment {IO122_N} { LOCATION = D23; }#IO_L2N_15
set_pin_assignment {IO122_P} { LOCATION = E23; }#IO_L2P_15
set_pin_assignment {IO123_N} { LOCATION = C26; }#IO_L11N_15,GCLKIOC3_15
set_pin_assignment {IO123_P} { LOCATION = D26; }#IO_L11P_15,GCLKIOT3_15
set_pin_assignment {IO124_N} { LOCATION = A23; }#IO_L1N_15
set_pin_assignment {IO124_P} { LOCATION = B23; }#IO_L1P_15
set_pin_assignment {IO125_N} { LOCATION = B24; }#IO_L8N_15
set_pin_assignment {IO125_P} { LOCATION = C24; }#IO_L8P_15
set_pin_assignment {IO126_N} { LOCATION = B25; }#IO_L12N_15,GCLKIOC2_15
set_pin_assignment {IO126_P} { LOCATION = C25; }#IO_L12P_15,GCLKIOT2_15
set_pin_assignment {IO127_N} { LOCATION = A26; }#IO_L10N_15
```

```
set_pin_assignment {IO127_P} { LOCATION = A25; }#IO_L10P_15
set_pin_assignment {IO128_N} { LOCATION = A27; }#IO_L7N_15
set_pin_assignment {IO128_P} { LOCATION = B27; }#IO_L7P_15
set_pin_assignment {IO129_N} { LOCATION = A28; }#IO_L9N_15,GPLL1_15_OUTN
set_pin_assignment {IO129_P} { LOCATION = B28; }#IO_L9P_15,GPLL1_15_OUTP
set_pin_assignment {IO130_N} { LOCATION = B29; }#IO_L15N_15
set_pin_assignment {IO130_P} { LOCATION = C29; }#IO_L15P_15
set_pin_assignment {IO131_N} { LOCATION = A30; }#IO_L17N_15
set_pin_assignment {IO131_P} { LOCATION = B30; }#IO_L17P_15
set_pin_assignment {IO132_N} { LOCATION = C30; }#IO_L16N_15,GPLL0_15_OUTN
set_pin_assignment {IO132_P} { LOCATION = D29; }#IO_L16P_15,GPLL0_15_OUTP
set_pin_assignment {IO133_N} { LOCATION = E30; }#IO_L18N_15
set_pin_assignment {IO133_P} { LOCATION = E29; }#IO_L18P_15
set_pin_assignment {IO134_N} { LOCATION = F30; }#IO_L22N_15
set_pin_assignment {IO134_P} { LOCATION = G29; }#IO_L22P_15
set_pin_assignment {IO135_N} { LOCATION = D28; }#IO_L14N_15,GCLKIOC0_15
set_pin_assignment {IO135_P} { LOCATION = E28; }#IO_L14P_15,GCLKIOT0_15
set_pin_assignment {IO136_N} { LOCATION = F28; }#IO_L20N_15
set_pin_assignment {IO136_P} { LOCATION = G28; }#IO_L20P_15
set_pin_assignment {IO137_N} { LOCATION = F27; }#IO_L21N_15
set_pin_assignment {IO137_P} { LOCATION = G27; }#IO_L21P_15
set_pin_assignment {IO138_N} { LOCATION = E26; }#IO_L5N_15
set_pin_assignment {IO138_P} { LOCATION = F26; }#IO_L5P_15
set_pin_assignment {IO139_N} { LOCATION = H25; }#IO_L19N_15
set_pin_assignment {IO139_P} { LOCATION = H24; }#IO_L19P_15
set_pin_assignment {IO140_N} { LOCATION = G24; }#IO_L6N_15
set_pin_assignment {IO140_P} { LOCATION = G23; }#IO_L6P_15
```

5.3 APB102 核心板配置 IO 分配

```
set_pin_assignment {FPGA_CFG_CCLK} { LOCATION = B10; }#CCLK_0
set_pin_assignment {FPGA_CFG_CSN} { LOCATION = V26; }#IO_L16P_13,CSN
set_pin_assignment {FPGA_CFG_CSON_DOUT} { LOCATION = U30; }#IO_L15N_13,CSON
set_pin_assignment {FPGA_CFG_D0_MOSI} { LOCATION = P24; }#IO_L1P_13,D0
set_pin_assignment {FPGA_CFG_D1_DIN_MISO} { LOCATION = R25; }#IO_L1N_13,D1
set_pin_assignment {FPGA_CFG_D2_WPN} { LOCATION = R20; }#IO_L2P_13,D2
set_pin_assignment {FPGA_CFG_D3_HOLDN} { LOCATION = R21; }#IO_L2N_13,D3
set_pin_assignment {FPGA_CFG_D4} { LOCATION = T20; }#IO_L4P_13,D4
set_pin_assignment {FPGA_CFG_D5} { LOCATION = T21; }#IO_L4N_13,D5
set_pin_assignment {FPGA_CFG_D6} { LOCATION = T22; }#IO_L5P_13,D6
set_pin_assignment {FPGA_CFG_D7} { LOCATION = T23; }#IO_L5N_13,D7
set_pin_assignment {FPGA_CFG_D8} { LOCATION = U20; }#IO_L6N_13,D8
set_pin_assignment {FPGA_CFG_D9} { LOCATION = P29; }#IO_L7P_13,D9
set_pin_assignment {FPGA_CFG_D10} { LOCATION = R29; }#IO_L7N_13,D10
set_pin_assignment {FPGA_CFG_D11} { LOCATION = P27; }#IO_L8P_13,D11
set_pin_assignment {FPGA_CFG_D12} { LOCATION = P28; }#IO_L8N_13,D12
set_pin_assignment {FPGA_CFG_D13} { LOCATION = T30; }#IO_L9N_13,D13
set_pin_assignment {FPGA_CFG_D14} { LOCATION = P26; }#IO_L10P_13,D14
set_pin_assignment {FPGA_CFG_D15} { LOCATION = R26; }#IO_L10N_13,D15
set_pin_assignment {FPGA_CFG_D16} { LOCATION = W22; }#IO_L24N_13,D16
set_pin_assignment {FPGA_CFG_D17} { LOCATION = W21; }#IO_L24P_13,D17
set_pin_assignment {FPGA_CFG_D18} { LOCATION = V24; }#IO_L23N_13,D18
set_pin_assignment {FPGA_CFG_D19} { LOCATION = U24; }#IO_L23P_13,D19
set_pin_assignment {FPGA_CFG_D20} { LOCATION = V22; }#IO_L22N_13,D20
set_pin_assignment {FPGA_CFG_D21} { LOCATION = V21; }#IO_L22P_13,D21
```

```
set_pin_assignment {FPGA_CFG_D22} { LOCATION = U23; }#IO_L21N_13,D22
set_pin_assignment {FPGA_CFG_D23} { LOCATION = W24; }#IO_L20N_13,D23
set_pin_assignment {FPGA_CFG_D24} { LOCATION = W23; }#IO_L20P_13,D24
set_pin_assignment {FPGA_CFG_D25} { LOCATION = V20; }#IO_L19N_13,D25
set_pin_assignment {FPGA_CFG_D26} { LOCATION = V19; }#IO_L19P_13,D26
set_pin_assignment {FPGA_CFG_D27} { LOCATION = W26; }#IO_L18N_13,D27
set_pin_assignment {FPGA_CFG_D28} { LOCATION = V25; }#IO_L18P_13,D28
set_pin_assignment {FPGA_CFG_D29} { LOCATION = V30; }#IO_L17N_13,D29
set_pin_assignment {FPGA_CFG_D30} { LOCATION = V29; }#IO_L17P_13,D30
set_pin_assignment {FPGA_CFG_D31} { LOCATION = V27; }#IO_L16N_13,D31
set_pin_assignment {FPGA_CFG_DONE} { LOCATION = M10; }#DONE_0
set_pin_assignment {FPGA_CFG_HSWAPEN} { LOCATION = R23; }#IO_L3P_13,HSWAPEN
set_pin_assignment {FPGA_CFG_INITN} { LOCATION = A10; }#INITN_0
set_pin_assignment {FPGA_CFG_PROGN} { LOCATION = K10; }#PROGRAMN_0
set_pin_assignment {FPGA_CFG_RDWRN} { LOCATION = U29; }#IO_L15P_13,RDWRN
set_pin_assignment {FPGA_CFG_SPICSN_BUSY} { LOCATION = U19; }#IO_L6P_13,SPICSN
set_pin_assignment {FPGA_CFG_M0} { LOCATION = AB5; }#M0_0,INPUT
set_pin_assignment {FPGA_CFG_M1} { LOCATION = AB2; }#M1_0,INPUT
set_pin_assignment {FPGA_CFG_M2} { LOCATION = AB1; }#M2_0,INPUT
set_pin_assignment {FPGA_CFG_TCK} { LOCATION = E10; }#TCK_0
set_pin_assignment {FPGA_CFG_TDI} { LOCATION = H10; }#TDI_0
set_pin_assignment {FPGA_CFG_TDO} { LOCATION = G10; }#TDO_0
set_pin_assignment {FPGA_CFG_TMS} { LOCATION = F10; }#TMS_0
set_pin_assignment {FPGA_CFG_TRSTN} { LOCATION = L10; }#TRSTN_0
set_pin_assignment {FPGA_CFG_USRCLK} { LOCATION = R24; }#IO_L3N_13,USRCLK
```

5.4 APB102 核心板按键 LED 时钟 IO 分配

```
set_pin_assignment {KEY0} { LOCATION = U28; }#IO_L13N_13,GCLKIOC1_13
set_pin_assignment {KEY1} { LOCATION = T28; }#IO_L11N_13,GCLKIOC3_13
set_pin_assignment {LED0} { LOCATION = AA30; }#IO_L8N_12
set_pin_assignment {LED1} { LOCATION = Y30; }#IO_L8P_12
set_pin_assignment {FPGA_SYSCLK_50MHZ} { LOCATION = T26; }#IO_L12P_13,GCLKIOT2_13
```

5.5 APB102 核心板散热风扇 IO 分配

```
set_pin_assignment {FPGA_FAN_PWM} { LOCATION = T25; }#IO_L14P_13,GCLKIOT0_13
set_pin_assignment {FPGA_FAN_SPEED} { LOCATION = U25; }#IO_L14N_13,GCLKIOC0_13
```

5.6 APB102 配置板 FT2232 IO 分配

```
set_pin_assignment {FT2232_VCCIO_CON} { LOCATION = AF28; }#IO_L14N_12,GCLKIOC0_12
set_pin_assignment {FTDI_AC0} { LOCATION = Y29; }#IO_L4N_12
set_pin_assignment {FTDI_AC1} { LOCATION = W29; }#IO_L4P_12
set_pin_assignment {FTDI_AC2} { LOCATION = N26; }#IO_L18N_14
set_pin_assignment {FTDI_AC3} { LOCATION = N25; }#IO_L18P_14
set_pin_assignment {FTDI_AC4} { LOCATION = M27; }#IO_L16N_14,GPLL0_14_OUTN
set_pin_assignment {FTDI_AC5} { LOCATION = N27; }#IO_L16P_14,GPLL0_14_OUTP
set_pin_assignment {FTDI_AC6} { LOCATION = M29; }#IO_L15P_14
set_pin_assignment {FTDI_AC7} { LOCATION = N30; }#IO_L17N_14
set_pin_assignment {FTDI_AD5} { LOCATION = M24; }#IO_L23P_14
set_pin_assignment {FTDI_AD6} { LOCATION = N24; }#IO_L21N_14
set_pin_assignment {FTDI_AD7} { LOCATION = P23; }#IO_L21P_14
set_pin_assignment {FTDI_BC0} { LOCATION = J28; }#IO_L8N_14
set_pin_assignment {FTDI_BC1} { LOCATION = L25; }#IO_L12P_14,GCLKIOT2_14
set_pin_assignment {FTDI_BC2} { LOCATION = K24; }#IO_L3N_14
set_pin_assignment {FTDI_BC3} { LOCATION = K23; }#IO_L3P_14
set_pin_assignment {FTDI_BC4} { LOCATION = J24; }#IO_L1N_14
```

```
set_pin_assignment {FTDI_BC5} { LOCATION = J23; }#IO_L1P_14
set_pin_assignment {FTDI_BC6} { LOCATION = K21; }#IO_L4N_14
set_pin_assignment {FTDI_BC7} { LOCATION = L21; }#IO_L4P_14
set_pin_assignment {FTDI_BD0} { LOCATION = L30; }#IO_L9P_14,GPLL1_14_OUTP
set_pin_assignment {FTDI_BD1} { LOCATION = L28; }#IO_L14N_14,GCLKIOC0_14
set_pin_assignment {FTDI_BD2} { LOCATION = M28; }#IO_L14P_14,GCLKIOT0_14
set_pin_assignment {FTDI_BD3} { LOCATION = H29; }#IO_L7N_14
set_pin_assignment {FTDI_BD4} { LOCATION = K29; }#IO_L13N_14,GCLKIOC1_14
set_pin_assignment {FTDI_BD5} { LOCATION = K28; }#IO_L13P_14,GCLKIOT1_14
set_pin_assignment {FTDI_BD6} { LOCATION = J26; }#IO_L10N_14
set_pin_assignment {FTDI_BD7} { LOCATION = K26; }#IO_L10P_14
set_pin_assignment {FTDI_JTAG_ACT} { LOCATION = M25; }#IO_L23N_14
set_pin_assignment {FTDI_TCK} { LOCATION = M23; }#IO_L24N_14
set_pin_assignment {FTDI_TDI} { LOCATION = M22; }#IO_L24P_14
set_pin_assignment {FTDI_TDO} { LOCATION = P22; }#IO_L22N_14
set_pin_assignment {FTDI_TMS} { LOCATION = P21; }#IO_L22P_14
```

5.7 APB102 配置板 SI5345 IO 分配

```
set_pin_assignment {SI5345_CLK_IN_SEL0} { LOCATION = AJ21; }#IO_L23N_11
set_pin_assignment {SI5345_CLK_IN_SEL1} { LOCATION = AH21; }#IO_L23P_11
set_pin_assignment {SI5345_FDEC} { LOCATION = AG24; }#IO_L14P_11,GCLKIOT0_11
set_pin_assignment {SI5345_FINC} { LOCATION = AG22; }#IO_L20P_11
set_pin_assignment {SI5345_I2C_SEL} { LOCATION = AA20; }#IO_L6P_11
set_pin_assignment {SI5345_IIC_SCLK} { LOCATION = AJ24; }#IO_L15P_11
set_pin_assignment {SI5345_IIC_SDA} { LOCATION = AH24; }#IO_L14N_11,GCLKIOC0_11
set_pin_assignment {SI5345_IN0_CLK_N} { LOCATION = AF21; }#IO_L19N_11
set_pin_assignment {SI5345_IN0_CLK_P} { LOCATION = AF20; }#IO_L19P_11
```

```
set_pin_assignment {SI5345_INTR} { LOCATION = AK25; }#IO_L15N_11
set_pin_assignment {SI5345_LOLB} { LOCATION = AH22; }#IO_L20N_11
set_pin_assignment {SI5345_OEB} { LOCATION = AK23; }#IO_L17P_11
set_pin_assignment {SI5345_RST} { LOCATION = AK24; }#IO_L17N_11
set_pin_assignment {SI5345_SYSTEM_CLKN} { LOCATION = D19; }#IO_L14N_16,GCLKIOC0_16
set_pin_assignment {SI5345_SYSTEM_CLKP} { LOCATION = E19; }#IO_L14P_16,GCLKIOT0_16
```

5.8 APB102 配置板 SERDES IO 分配

```
set_pin_assignment {PCIE_CLK_N_82} { LOCATION = L7; }#REFCLKM_82
set_pin_assignment {PCIE_CLK_N_83} { LOCATION = N7; }#REFCLKM_83
set_pin_assignment {PCIE_CLK_P_82} { LOCATION = L8; }#REFCLKP_82
set_pin_assignment {PCIE_CLK_P_83} { LOCATION = N8; }#REFCLKP_83
set_pin_assignment {PCIE_RST} { LOCATION = K19; }#IO_L6P_16
set_pin_assignment {PCIE_RX0_N} { LOCATION = M6; }#RXP1_83
set_pin_assignment {PCIE_RX0_P} { LOCATION = M5; }#RXM1_83
set_pin_assignment {PCIE_RX1_N} { LOCATION = P6; }#RXP0_83
set_pin_assignment {PCIE_RX1_P} { LOCATION = P5; }#RXM0_83
set_pin_assignment {PCIE_RX2_N} { LOCATION = R4; }#RXP1_82
set_pin_assignment {PCIE_RX2_P} { LOCATION = R3; }#RXM1_82
set_pin_assignment {PCIE_RX3_N} { LOCATION = T6; }#RXP0_82
set_pin_assignment {PCIE_RX3_P} { LOCATION = T5; }#RXM0_82
set_pin_assignment {PCIE_TX0_N} { LOCATION = L4; }#TXP1_83
set_pin_assignment {PCIE_TX0_P} { LOCATION = L3; }#TXM1_83
set_pin_assignment {PCIE_TX1_N} { LOCATION = M2; }#TXP0_83
set_pin_assignment {PCIE_TX1_P} { LOCATION = M1; }#TXM0_83
set_pin_assignment {PCIE_TX2_N} { LOCATION = N4; }#TXP1_82
set_pin_assignment {PCIE_TX2_P} { LOCATION = N3; }#TXM1_82
```

```
set_pin_assignment {PCIE_TX3_N} { LOCATION = P2; }#TXP0_82

set_pin_assignment {PCIE_TX3_P} { LOCATION = P1; }#TXM0_82

set_pin_assignment {SFP1_RX_N} { LOCATION = V5; }#RXM1_81

set_pin_assignment {SFP1_RX_P} { LOCATION = V6; }#RXP1_81

set_pin_assignment {SFP1_TX_DIS} { LOCATION = AF30; }#IO_L16N_12,GPLL0_12_OUTN

set_pin_assignment {SFP1_TX_LOSS} { LOCATION = AE30; }#IO_L16P_12,GPLL0_12_OUTP
set_pin_assignment {SFP1_TX_N} { LOCATION = T2; }#TXP1_81

set_pin_assignment {SFP1_TX_P} { LOCATION = T1; }#TXM1_81

set_pin_assignment {SFP2_RX_N} { LOCATION = Y5; }#RXM1_80

set_pin_assignment {SFP2_RX_P} { LOCATION = Y6; }#RXP1_80

set_pin_assignment {SFP2_TX_DIS} { LOCATION = AA28; }#IO_L3N_12

set_pin_assignment {SFP2_TX_LOSS} { LOCATION = Y28; }#IO_L3P_12

set_pin_assignment {SFP2_TX_N} { LOCATION = V1; }#TXM1_80

set_pin_assignment {SFP2_TX_P} { LOCATION = V2; }#TXP1_80

set_pin_assignment {SFP3_RX_N} { LOCATION = AA3; }#RXM0_80

set_pin_assignment {SFP3_RX_P} { LOCATION = AA4; }#RXP0_80

set_pin_assignment {SFP3_TX_DIS} { LOCATION = AE29; }#IO_L9N_12,GPLL1_12_OUTN

set_pin_assignment {SFP3_TX_LOSS} { LOCATION = AD29; }#IO_L9P_12,GPLL1_12_OUTP

set_pin_assignment {SFP3_TX_N} { LOCATION = Y2; }#TXP0_80

set_pin_assignment {SFP3_TX_P} { LOCATION = Y1; }#TXM0_80

set_pin_assignment {SFP4_RX_N} { LOCATION = W3; }#RXM0_81

set_pin_assignment {SFP4_RX_P} { LOCATION = W4; }#RXP0_81

set_pin_assignment {SFP4_TX_DIS} { LOCATION = AC30; }#IO_L7N_12

set_pin_assignment {SFP4_TX_LOSS} { LOCATION = AC29; }#IO_L7P_12

set_pin_assignment {SFP4_TX_N} { LOCATION = U4; }#TXP0_81

set_pin_assignment {SFP4_TX_P} { LOCATION = U3; }#TXM0_81
```

5.9 APB102 配置板用户 IO 分配

```
set_pin_assignment {USER2_IO1N} { LOCATION = AB30; }#IO_L10N_12
set_pin_assignment {USER2_IO1P} { LOCATION = AB29; }#IO_L10P_12
set_pin_assignment {USER2_IO2N} { LOCATION = AA26; }#IO_L1N_12
set_pin_assignment {USER2_IO2P} { LOCATION = Y26; }#IO_L1P_12
set_pin_assignment {USER2_IO3N} { LOCATION = AA23; }#IO_L4N_11
set_pin_assignment {USER2_IO3P} { LOCATION = AA22; }#IO_L4P_11
set_pin_assignment {USER2_IO4N} { LOCATION = AD26; }#IO_L19N_12
set_pin_assignment {USER2_IO4P} { LOCATION = AC26; }#IO_L19P_12
set_pin_assignment {USER2_IO5N} { LOCATION = AB25; }#IO_L6N_12
set_pin_assignment {USER2_IO5P} { LOCATION = AA25; }#IO_L6P_12
set_pin_assignment {USER2_IO6N} { LOCATION = W28; }#IO_L2N_12
set_pin_assignment {USER2_IO6P} { LOCATION = W27; }#IO_L2P_12
set_pin_assignment {USER2_IO7N} { LOCATION = AC25; }#IO_L7N_11
set_pin_assignment {USER2_IO7P} { LOCATION = AB24; }#IO_L7P_11
set_pin_assignment {USER2_IO8N} { LOCATION = AC27; }#IO_L12N_12,GCLKIOC2_12
set_pin_assignment {USER2_IO8P} { LOCATION = AB27; }#IO_L12P_12,GCLKIOT2_12
set_pin_assignment {USER2_IO9N} { LOCATION = AG28; }#IO_L21N_12
set_pin_assignment {USER2_IO9P} { LOCATION = AG27; }#IO_L21P_12
set_pin_assignment {USER2_IO10N} { LOCATION = AH30; }#IO_L18N_12
set_pin_assignment {USER2_IO10P} { LOCATION = AG30; }#IO_L18P_12
set_pin_assignment {USER2_IO11N} { LOCATION = AH29; }#IO_L13N_12,GCLKIOC1_12
set_pin_assignment {USER2_IO11P} { LOCATION = AG29; }#IO_L13P_12,GCLKIOT1_12
set_pin_assignment {USER2_IO12N} { LOCATION = AH27; }#IO_L22N_12
set_pin_assignment {USER2_IO12P} { LOCATION = AH26; }#IO_L22P_12
set_pin_assignment {USER2_IO13N} { LOCATION = AE21; }#IO_L10N_11
set_pin_assignment {USER2_IO13P} { LOCATION = AD21; }#IO_L10P_11
set_pin_assignment {USER2_IO14N} { LOCATION = AA21; }#IO_L2N_11
```

```
set_pin_assignment {USER2_IO14P} { LOCATION = Y21; }#IO_L2P_11
set_pin_assignment {USER2_IO15N} { LOCATION = AB23; }#IO_L3N_11
set_pin_assignment {USER2_IO15P} { LOCATION = AB22; }#IO_L3P_11
set_pin_assignment {USER2_IO16N} { LOCATION = Y24; }#IO_L1N_11
set_pin_assignment {USER2_IO16P} { LOCATION = Y23; }#IO_L1P_11
set_pin_assignment {USER2_IO17N} { LOCATION = AD24; }#IO_L9N_11,GPLL1_11_OUTN
set_pin_assignment {USER2_IO17P} { LOCATION = AC24; }#IO_L9P_11,GPLL1_11_OUTP
```

5.10 APB102 配置板按键 LED 分配

```
set_pin_assignment {PH400_KEY0} { LOCATION = AE23; }#IO_L11P_11,GCLKIOT3_11
set_pin_assignment {PH400_KEY1} { LOCATION = AD22; }#IO_L8N_11
set_pin_assignment {PH400_KEY2} { LOCATION = AC22; }#IO_L8P_11
set_pin_assignment {PH400_LED0} { LOCATION = AC20; }#IO_L5P_11
set_pin_assignment {PH400_LED1} { LOCATION = AF23; }#IO_L11N_11,GCLKIOC3_11
set_pin_assignment {PH400_LED2} { LOCATION = AC21; }#IO_L5N_11
```

5.11 APB102 配置散热风扇 IO 分配

```
set_pin_assignment {PH400_FAN_PWM} { LOCATION = H27; }#IO_L23N_15
set_pin_assignment {PH400_FAN_SPEED} { LOCATION = H26; }#IO_L23P_15
```

5.12 APB102 对接 XC7Z035 IO 分配

```
set_pin_assignment {Z7_IO1N} { LOCATION = D27; }#IO_L13P_15,GCLKIOT1_15
set_pin_assignment {Z7_IO1P} { LOCATION = C27; }#IO_L13N_15,GCLKIOC1_15
set_pin_assignment {Z7_IO2N} { LOCATION = E24; }#IO_L4P_15
set_pin_assignment {Z7_IO2P} { LOCATION = D24; }#IO_L4N_15
set_pin_assignment {Z7_IO3N} { LOCATION = C19; }#IO_L24P_16
set_pin_assignment {Z7_IO3P} { LOCATION = B19; }#IO_L24N_16
set_pin_assignment {Z7_IO4N} { LOCATION = E23; }#IO_L2P_15
```

```
set_pin_assignment {Z7_IO4P} { LOCATION = D23; }#IO_L2N_15
set_pin_assignment {Z7_IO5N} { LOCATION = D26; }#IO_L11P_15,GCLKIOT3_15
set_pin_assignment {Z7_IO5P} { LOCATION = C26; }#IO_L11N_15,GCLKIOC3_15
set_pin_assignment {Z7_IO6N} { LOCATION = B23; }#IO_L1P_15
set_pin_assignment {Z7_IO6P} { LOCATION = A23; }#IO_L1N_15
set_pin_assignment {Z7_IO7N} { LOCATION = C24; }#IO_L8P_15
set_pin_assignment {Z7_IO7P} { LOCATION = B24; }#IO_L8N_15
set_pin_assignment {Z7_IO8N} { LOCATION = C25; }#IO_L12P_15,GCLKIOT2_15
set_pin_assignment {Z7_IO8P} { LOCATION = B25; }#IO_L12N_15,GCLKIOC2_15
set_pin_assignment {Z7_IO9N} { LOCATION = A25; }#IO_L10P_15
set_pin_assignment {Z7_IO9P} { LOCATION = A26; }#IO_L10N_15
set_pin_assignment {Z7_IO10N} { LOCATION = B27; }#IO_L7P_15
set_pin_assignment {Z7_IO10P} { LOCATION = A27; }#IO_L7N_15
set_pin_assignment {Z7_IO11N} { LOCATION = B28; }#IO_L9P_15,GPLL1_15_OUTP
set_pin_assignment {Z7_IO11P} { LOCATION = A28; }#IO_L9N_15,GPLL1_15_OUTN
set_pin_assignment {Z7_IO12N} { LOCATION = C29; }#IO_L15P_15
set_pin_assignment {Z7_IO12P} { LOCATION = B29; }#IO_L15N_15
set_pin_assignment {Z7_IO13N} { LOCATION = B30; }#IO_L17P_15
set_pin_assignment {Z7_IO13P} { LOCATION = A30; }#IO_L17N_15
set_pin_assignment {Z7_IO14N} { LOCATION = D29; }#IO_L16P_15,GPLL0_15_OUTP
set_pin_assignment {Z7_IO14P} { LOCATION = C30; }#IO_L16N_15,GPLL0_15_OUTN
set_pin_assignment {Z7_IO15N} { LOCATION = E29; }#IO_L18P_15
set_pin_assignment {Z7_IO15P} { LOCATION = E30; }#IO_L18N_15
set_pin_assignment {Z7_IO16N} { LOCATION = G29; }#IO_L22P_15
set_pin_assignment {Z7_IO16P} { LOCATION = F30; }#IO_L22N_15
set_pin_assignment {Z7_IO17N} { LOCATION = E28; }#IO_L14P_15,GCLKIOT0_15
set_pin_assignment {Z7_IO17P} { LOCATION = D28; }#IO_L14N_15,GCLKIOC0_15
```

```
set_pin_assignment {Z7_IO18N} { LOCATION = G28; }#IO_L20P_15

set_pin_assignment {Z7_IO18P} { LOCATION = F28; }#IO_L20N_15

set_pin_assignment {Z7_IO19N} { LOCATION = G27; }#IO_L21P_15

set_pin_assignment {Z7_IO19P} { LOCATION = F27; }#IO_L21N_15

set_pin_assignment {Z7_IO20N} { LOCATION = F26; }#IO_L5P_15

set_pin_assignment {Z7_IO20P} { LOCATION = E26; }#IO_L5N_15
```

5.13 XC7Z035 核心板管脚分配

核心板 IO 分配参照 7Z035 核心板使用手册。

表 5-1 XC7Z035 核心板管脚分配表

7Z035 IO	功能	7Z035 IO	功能
AB25	FPGA_CFG_CCLK	AD15	Z7_IO10N
AA14	FPGA_CFG_CSN	AD16	Z7_IO10P
AB14	FPGA_CFG_CSON_DOUT	AC16	Z7_IO11N
Y20	FPGA_CFG_D0_MOSI	AC17	Z7_IO11P
Y18	FPGA_CFG_D1_DIN_MISO	AB16	Z7_IO12N
W16	FPGA_CFG_D10	AB17	Z7_IO12P
AC24	FPGA_CFG_D11	AF18	Z7_IO13N
W18	FPGA_CFG_D12	AE18	Z7_IO13P
AA15	FPGA_CFG_D13	AF20	Z7_IO14N
AC23	FPGA_CFG_D14	AF19	Z7_IO14P
AA18	FPGA_CFG_D15	AF22	Z7_IO15N
Y10	FPGA_CFG_D16	AE22	Z7_IO15P
AA10	FPGA_CFG_D17	AF23	Z7_IO16N
Y16	FPGA_CFG_D18	AE23	Z7_IO16P
AA17	FPGA_CFG_D19	AE21	Z7_IO17N
AD20	FPGA_CFG_D2_WPN	AE20	Z7_IO17P
Y13	FPGA_CFG_D20	AD19	Z7_IO18N
AA13	FPGA_CFG_D21	AD18	Z7_IO18P
Y17	FPGA_CFG_D22	AC22	Z7_IO19N
AB11	FPGA_CFG_D23	AC21	Z7_IO19P
AB10	FPGA_CFG_D24	AF10	Z7_IO1N
W15	FPGA_CFG_D25	AE11	Z7_IO1P

7Z035 IO	功能	7Z035 IO	功能
AB21	FPGA_CFG_D26	AD24	Z7_IO20N
AA12	FPGA_CFG_D27	AD23	Z7_IO20P
Y15	FPGA_CFG_D28	AF12	Z7_IO2N
Y11	FPGA_CFG_D29	AE12	Z7_IO2P
AA19	FPGA_CFG_D3_HOLDN	AF13	Z7_IO3N
Y12	FPGA_CFG_D30	AE13	Z7_IO3P
W13	FPGA_CFG_D31	AF14	Z7_IO4N
AD21	FPGA_CFG_D4	AF15	Z7_IO4P
AB19	FPGA_CFG_D5	AF17	Z7_IO5N
W20	FPGA_CFG_D6	AE17	Z7_IO5P
AB20	FPGA_CFG_D7	AD13	Z7_IO6N
AB22	FPGA_CFG_D8	AC13	Z7_IO6P
W19	FPGA_CFG_D9	AD14	Z7_IO7N
AA23	FPGA_CFG_DONE	AC14	Z7_IO7P
AA25	FPGA_CFG_INITN	AE15	Z7_IO8N
AA24	FPGA_CFG_M0	AE16	Z7_IO8P
AC19	FPGA_CFG_M1	AC11	Z7_IO9N
AC18	FPGA_CFG_M2	AB12	Z7_IO9P
AA22	FPGA_CFG_PROGN	AB26	ZYNQ_FAN_PWM
AB15	FPGA_CFG_RDWRN	AC26	ZYNQ_FAN_SPEED
AB24	FPGA_CFG_SPICSN_BUSY	AE26	ZYNQ_KEY0
AA20	FPGA_CFG_USRCLK	AE25	ZYNQ_KEY1
AD25	SI5345_IN1_CLK_N	AF25	ZYNQ_LED0
AD26	SI5345_IN1_CLK_P	AF24	ZYNQ_LED1

6 版本信息

日期	版本	修订记录
2021/06/22	0.1	初版建立。
2022/01/20	1.0	首次发布正式版本
2022/06/28	1.1	将文档中的器件名称统一为 PH1A400SFG900

版权所有©2022 上海安路信息科技股份有限公司

未经本公司书面许可，任何单位和个人都不得擅自摘抄、复制、翻译本文档内容的部分或全部，并不得以任何形式传播。

免责声明

本文档并未授予任何知识产权的许可，并未以明示或暗示，或以禁止发言或其它方式授予任何知识产权许可。除安路科技在其产品的销售条款和条件中声明的责任之外，安路科技概不承担任何法律或非法律责任。安路科技对安路科技产品的销售和/或使用不作任何明示或暗示的担保，包括对产品的特定用途适用性、适销性或对任何专利权、版权或其它知识产权的侵权责任等，均不作担保。安路科技对文档中包含的文字、图片及其它内容的准确性和完整性不承担任何法律或非法律责任，安路科技保留修改文档中任何内容的权利，恕不另行通知。安路科技不承诺对这些文档进行适时的更新。